SR1045L THRU SR10150L

Surface Mount Schottky Barrier Rectifiers

VOLTAGE RANGE: 45-150 V
CURRENT: 10 A

TO-277

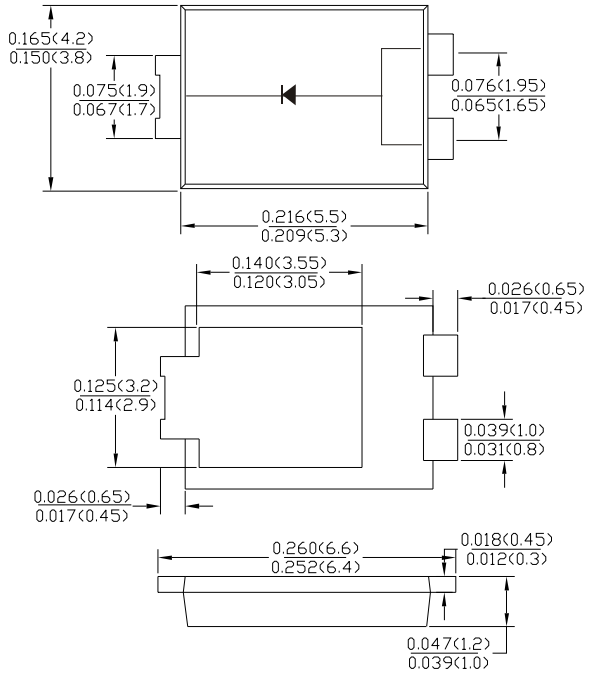

Dimiensions inches and (milimenters)

Features

- Schottky Barrier Chip
- High Thermal Reliability
- Patented Super Barrier Rectifier Technology
- High Forward Surge Capability
- Ultra Fow Power Loss,High Efficiency
- Excellent High Temperature Stability
- Plastic material-UL flammability 94V-0

Mechanical Data

- Case: TO-277, molded plastic
- Terminals:Plated Leads Solderable per MIL-STD-202,Method 208
- Polarity:Cathode Band
- Mounting Position:Any
- Marking:Type Number
- Lead Free:For RoHS/Lead Free Version

Maximum Ratings and Electrical Characteristics @T =25 A ℃ unless otherwise specified

Single Phase,half wave,60Hz,resistive or inductive load.For capacitive load,derate current by 20%.

Parameter	Symbol	SR 1045L	SR 1050L	SR 1060L	SR 1080L	SR 10100L	SR 10150L	Unit
Peak Repetitive Reverse Voltage Working Peak Reverse Voltage DC blocking voltage	V_{RRM} V_{RWM} V_{DC}	45	50	60	80	100	150	V
RMS Rectified Voltage	$V_{R(RMS)}$	32	35	42	56	70	105	V
Average Rectified Output Current (Note1)	IO	10						A
Non-Repetitive Peak Forward Surge8.3ms Single Half Sine-Wave Superimposed on rated load(JEDEC Method) (Note2)	I_{FSM}	275						A
Forward Voltage Drop T_A=25 ℃ @IF=10A	V_{FM}	0.42	0.45	0.47	0.75		0.78	V
Peak Reverse Curent T_A=25℃ At Rated DC Blocking Voltage T_A=100℃	IR	0.3 15						mA
Typical Thermal Resistance Junctionto Ambient	$R_{\theta JA}$ $R_{\theta JL}$	80 15						℃/W
Operating junction temperature range	TJ	-55 to +150						℃
storage temperature range	T_{STG}	-55 to +150						℃

RATINGS AND CHARACTERISTIC CURVES SR1045L THRU SR10150L

Fig.1 - Forward Current Derating Curve

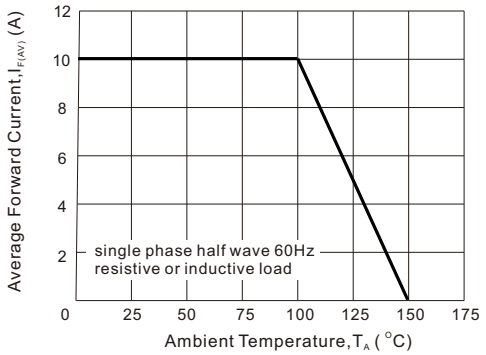

Fig.2 :Instantaneous Forward Voltage

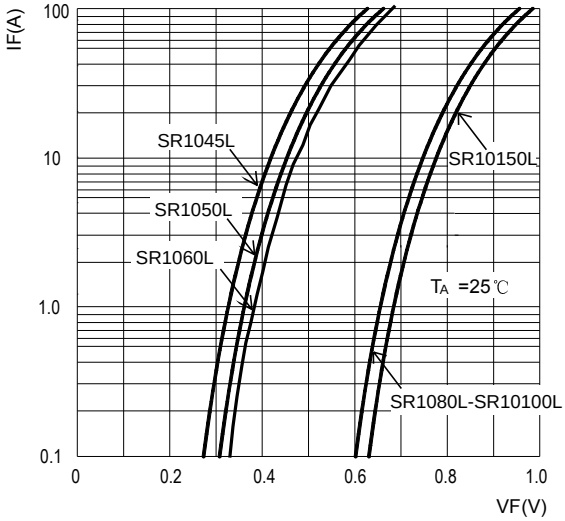

Fig.3: Surge Forward Current Capadility

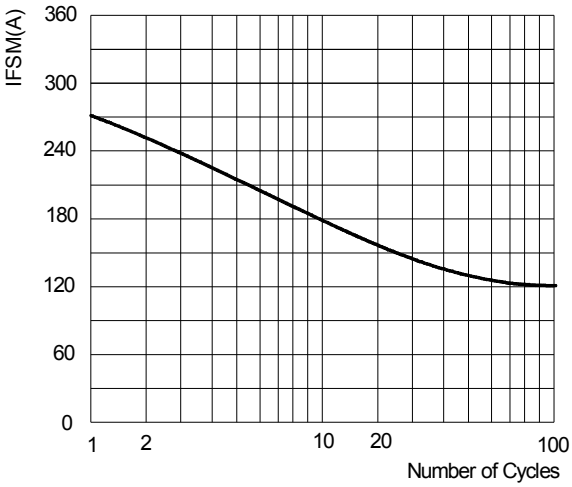

Fig.4: Typical Reverse Characteristics