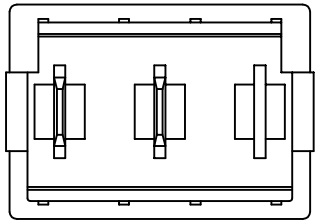

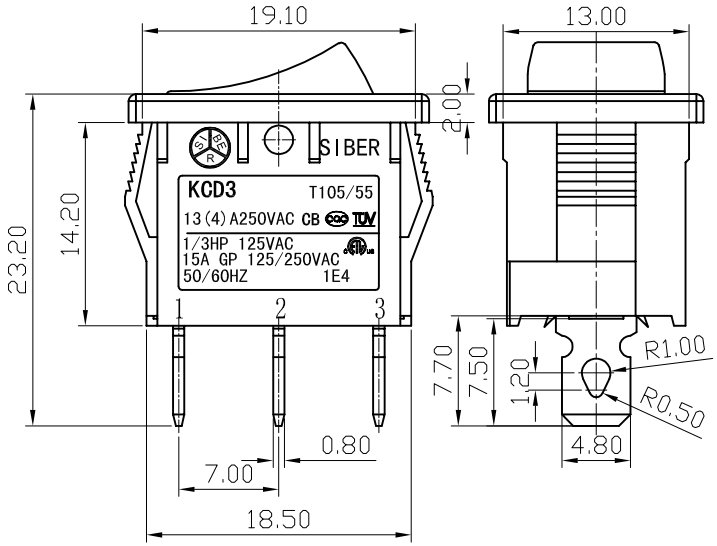

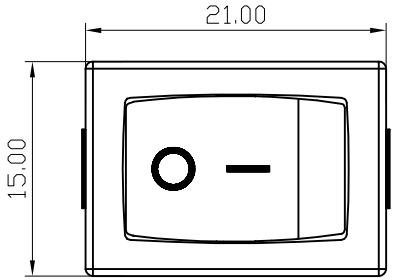

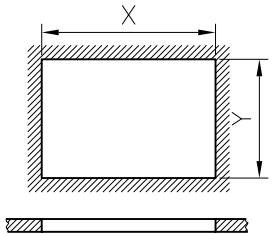

PANEL CUT-OUT

PANEL CUT-OUT		
Z	Y	X
0.70～1.25	12.90～13.10	18.9～19.1
1.25～2.00	12.90～13.10	19.1～19.2
2.00～3.00	12.90～13.10	19.3～19.4

NOTES:

1.Rating:

CQC 13(4)A 250V AC T105/55

ETL 15GPA 125/250V AC

1/3HP 125V AC T105/55

TUV 13(4)A 250V AC T105/55

CB 13(4)A 250V AC T105/555

2.Circuit Diagram:3P ON-ON

3.Terminal Strength:≥80N

4.Electrical life:≥10000 cycles

5.Withstand Voltage:Withstand Voltage:1500VAC 1min

Terminals to Button:3000VAC 1min

Leakage Current:1mA

6.Current resistance:≤50mΩ(initial)

7.Insulation resistance:≥100MΩ

8.Body Materil:NYLON 66 94V-0~2

SWITCHING CIRCUIT

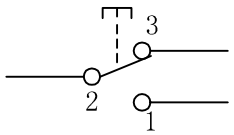

A4			
A3			
A2			
A1			
REV.	DATE	REVISION DESCRIPTION	ISSUE

普通公差:
COMMON TOLERANCE :

UP TO 5	±0.20
ABOVE 5 TO 30	±0.30
ABOVE 30	±0.50
ANGULAR	±5°

施霸(中国)电器制品有限公司
SIBER (CHINA) ELECTRIC MFG. CO.,LTD

单位 UNIT	mm	投影 PROJECTED		品名 PRODUCT NAME	跷板开关	比例 SCALE	Free
绘图 DRAWN BY		核对 CHECKED BY		型号 MODEL NO.	KCD3		
日期 DATE	2016.11.11	核准 APPROVAL BY		图号 DWG NO.	KCD3-H02		