TAITIEN
Our Performance, Your Reputation

PX Type
3.2 x 2.5 mm SMD Crystal Oscillator

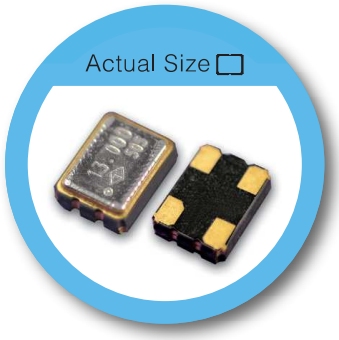

RoHS Compliant

FEATURE
- Typical 3.2 x 2.5 x 0.95mm ceramic SMD package.
- Tight symmetry (45 to 55%) available.
- Operation voltage: 1.8V, 2.5V, 3.3V
- Tri-state enable/disable

TYPICAL APPLICATION
- Computer Peripherals
- Set-top Box , HDTV
- DSC, PDA

DIMENSION (mm)

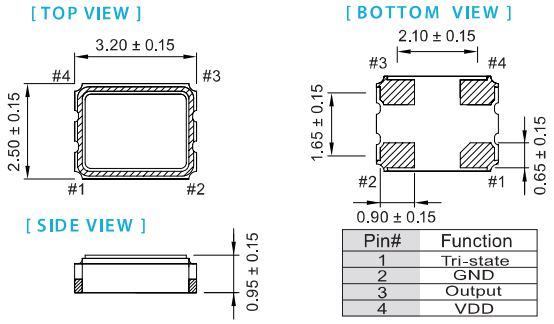

Pin#	Function
1	Tri-state
2	GND
3	Output
4	VDD

SOLDER PAD LAYOUT (mm)

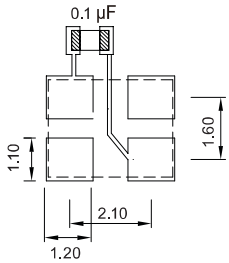

To ensure optimal oscillator performance, place a by-pass capacitor of 0.1μF as close to the part as possible between Vdd and GND pads.

ELECTRICAL SPECIFICATION

Parameter	3.3 V		2.5 V		1.8 V		unit
	Min.	Max.	Min.	Max.	Min.	Max.	
Supply Voltage Variation (V_{DD}) ±10%	2.97	3.63	2.25	2.75	1.62	1.98	V
Frequency Range	1	200	1	166	1	100	MHz
V_{DD} Sensitivity (±10 %)	-2	2	-2	2	-2	2	ppm
Supply Current 1 MHz ≦ Fo < 30 MHz	–	10	–	8	–	6	mA
30 MHz ≦ Fo < 75 MHz	–	15	–	10	–	8	
75 MHz ≦ Fo < 133 MHz	–	20	–	15	–	12	
133 MHz ≦ Fo < 166 MHz	–	22	–	15	–	–	
166 MHz ≦ Fo ≦ 200 MHz	–	25	–	–	–	–	
Duty Cycle	45	55	45	55	45	55	%
Output Level (CMOS)							
Output High (Logic "1")	2.97	–	2.25	–	1.62	–	V
Output Low (Logic "0")	–	0.33	–	0.25	–	0.18	
Transition Time:Rise/Fall Time+							
1 MHz ≦ Fo < 10 MHz	–	3	–	4	–	5	nSec
10 MHz ≦ Fo	–	2	–	3	–	4	
Start Time	–	2	–	2	–	2	mSec
Tri-State(Input to Pin 1)							
Enable (High voltage or floating)	2.31	–	1.75	–	1.26	–	V
Disable (Low voltage or GND)	–	0.99	–	0.75	–	0.54	
Period Jitter(Pk-Pk)							
Specific Frequency"	–	40	–	40	–	40	pSec
Others	–	200	–	200	–	200	
Standby Current	–	15	–	15	–	15	μA
Aging (@ 25°C 1st year)	–	±3	–	±3	–	±3	ppm
Storage Temp. Range	-55	125	-55	125	-55	125	°C

Standard frequencies are frequencies which the crystal has been designed and does not imply a stock position.
+ Transition times are measured between 10% and 90% of V_{DD}, with an output load of 15pF.
" Specific frequency including 4.0, 6.0, 8.0, 12.0, 13.0, 16.0, 19.2, 20.0, 24.0, 26.0, 32.0, 38.4 and 40.0MHz

FREQ. STABILITY vs. TEMP. RANGE

Temp. (°C) \ ppm	±20	±25	±50
-10 ~ +60	○	○	○
-20 ~ +70	△	○	○
-40 ~ +85	×	○	○

* ○: Available △:Conditional X: Not available
* Inclusive of calibration @ 25 °C, operating temperature range, input voltage variation, load variation, aging (1st year), shock, and vibration

Note: not all combination of options are available. Other specifications may be available upon request.