molex
one company › a world of innovation

This document was generated on 05/24/2010

PLEASE CHECK WWW.MOLEX.COM FOR LATEST PART INFORMATION

Part Number: 0015800405

Status: Active

Overview: cgrid__sl_products

Description: 2.54mm (.100") Pitch C-Grid® Header, Through Hole without Peg, Dual Row, Vertical, Shrouded, High Temperature, 40 Circuits, 0.76µm (30µ") Gold (Au) Selective Plating, Tin (Sn) PC Tail Plating

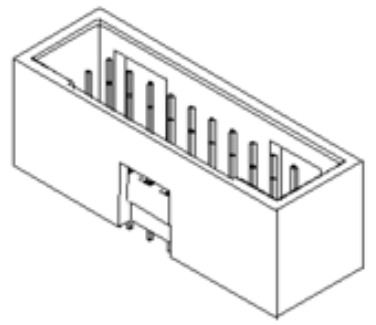

Series

image - Reference only

Documents:

3D Model
Packaging Specification (PDF)
Drawing (PDF)
Product Specification PS-70567 (PDF)
RoHS Certificate of Compliance (PDF)

Agency Certification

CSA	LR19980
UL	E29179

General

Product Family	PCB Headers
Series	70567
Application	Wire-to-Board
Overview	cgrid__sl_products
Product Name	C-Grid®

Physical

Breakaway	No
Circuits (Loaded)	40
Circuits (maximum)	40
Circuits Detail	40
Color - Resin	Black
First Mate / Last Break	No
Flammability	94V-0
Glow-Wire Compliant	No
Guide to Mating Part	No
Keying to Mating Part	None
Lock to Mating Part	Yes
Material - Metal	Brass, Phosphor Bronze
Material - Plating Mating	Gold
Material - Plating Termination	Tin
Material - Resin	High Temperature Thermoplastic
Number of Rows	2
Orientation	Vertical
PC Tail Length (in)	0.130 In
PC Tail Length (mm)	3.30 mm
PCB Locator	No
PCB Retention	Yes
PCB Thickness Recommended (in)	0.093 In
PCB Thickness Recommended (mm)	2.40 mm
Packaging Type	Tube
Pitch - Mating Interface (in)	0.100 In
Pitch - Mating Interface (mm)	2.54 mm
Pitch - Term. Interface (in)	0.100 In
Pitch - Term. Interface (mm)	2.54 mm
Plating min: Mating (µin)	30
Plating min: Mating (µm)	0.75
Plating min: Termination (µin)	75
Plating min: Termination (µm)	1.875

EU RoHS
ELV and RoHS Compliant

China RoHS

REACH SVHC
Contains SVHC: No

Halogen-Free Status
Not Reviewed

Need more information on product environmental compliance?

Email productcompliance@molex.com
For a multiple part number RoHS Certificate of Compliance, click here

Please visit the Contact Us section for any non-product compliance questions.

Search Parts in this Series
70567Series

Mates With
70450 Crimp Housing

Polarized to Mating Part	Yes
Polarized to PCB	No
Shrouded	Fully
Stackable	No
Surface Mount Compatible (SMC)	No
Temperature Range - Operating	-55°C to +105°C
Termination Interface: Style	Through Hole

Electrical

Current - Maximum per Contact	2.5A
Voltage - Maximum	250V

Solder Process Data

Duration at Max. Process Temperature (seconds)	5
Lead-free Process Capability	SMC & Wave Capable (TH only)
Max. Cycles at Max. Process Temperature	1
Process Temperature max. C	245

Material Info

Old Part Number	70567-0154

Reference - Drawing Numbers

Packaging Specification	PK-70873-0018
Product Specification	PS-70567
Sales Drawing	SDA-70567-****

OPTION A

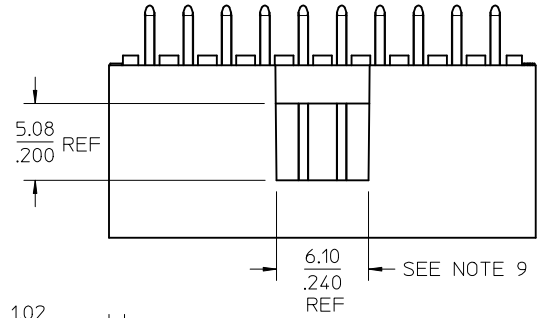

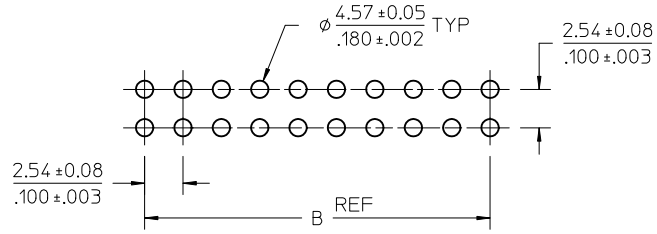

PCB LAYOUT: COMPONENT SIDE

TYPICAL PCB THICKNESS: 2.36/.093

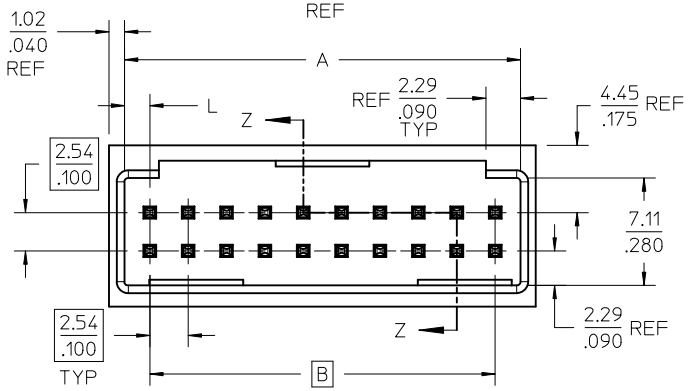

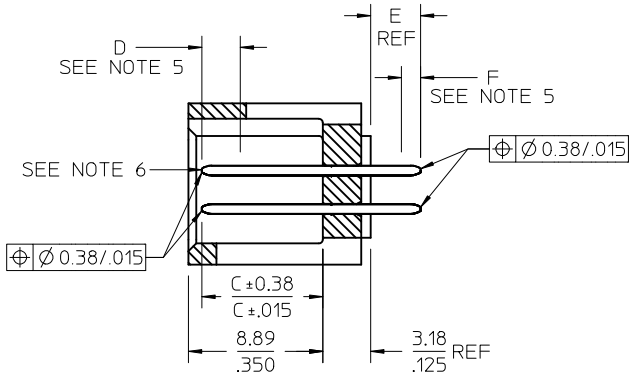

SECTION Z-Z

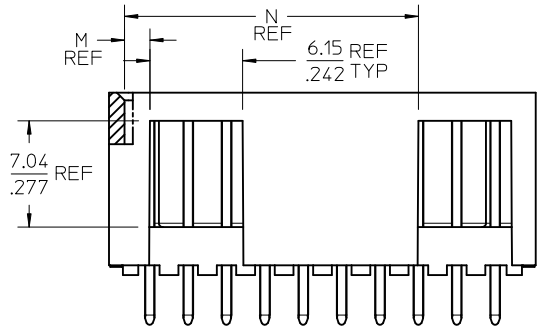

NOTES:

1. MATERIAL: SHROUDED WAFER: GLASS FILLED, LIQUID CRYSTAL POLYMER, COLOR: BLACK, 94V-0.
   PINS: COPPER ALLOY.
2. PLATING:
   TIN 0.00381/.000150 MINIMUM TIN, OVER NICKEL UNDERPLATE OVERALL
   15 GOLD 0.00038/.000015 MINIMUM GOLD PLATE IN SELECTED AREA
   0.00191/.000075 MINIMUM TIN IN SELECTED AREA
   OVER NICKEL UNDERPLATE OVERALL
   30 GOLD 0.00076/.000030 MINIMUM GOLD PLATE IN SELECTED AREA
   0.00191/.000075 MINIMUM TIN IN SELECTED AREA,
   OVER NICKEL UNDERPLATE OVERALL
3. PRODUCT SPECIFICATION: PS-70567.
4. PACKAGING: SEE CHARTS
5. MEASURE POINT FOR PLATING THICKNESS.
6. PIN PUSHOUT FORCE: 4 LBS. MINIMUM IN DIRECTION INDICATED.
7. FOR ILLUSTRATION PURPOSES, 20 (DUAL 10) CIRCUIT SIZE HEADER SHOWN.
8. PIN SOLDERABILITY PER MOLEX SPEC. SMES-152.
9. WINDOW NOT AVAILABLE ON 6 OR 8 CIRCUIT SIZE.
10. THIS PART CONFORMS TO CLASS B REQUIREMENTS OF COSMETIC SPECIFICATION PS-45499-002.

CKT	DIM A	DIM B	DIM L	DIM M	DIM N
06	8.43 / .332	5.08 / .200	1.68 / .066	1.68 / .066	———
08	10.97 / .432	7.62 / .300	1.68 / .066	1.68 / .066	———
10	13.51 / .532	10.16 / .400	1.68 / .066	4.22 / .166	———
12	16.05 / .632	12.70 / .500	1.68 / .066	4.22 / .166	———
14	18.59 / .732	15.24 / .600	1.68 / .066	6.76 / .266	———
16	21.13 / .832	17.78 / .700	1.68 / .066	6.76 / .266	———
18	23.67 / .932	20.32 / .800	1.68 / .066	9.30 / .366	———
20	26.21 / 1.032	22.86 / .900	1.68 / .066	1.68 / .066	19.46 / .766
22	28.75 / 1.132	25.40 / 1.000	1.68 / .066	1.68 / .066	22.00 / .866
24	31.29 / 1.232	27.94 / 1.100	1.68 / .066	1.68 / .066	24.54 / .966
26	33.83 / 1.332	30.48 / 1.200	1.68 / .066	1.68 / .066	27.08 / 1.066
28	36.37 / 1.432	33.02 / 1.300	1.68 / .066	1.68 / .066	29.62 / 1.166
30	38.91 / 1.532	35.56 / 1.400	1.68 / .066	1.68 / .066	32.16 / 1.266
32	41.45 / 1.632	38.10 / 1.500	1.68 / .066	1.68 / .066	34.70 / 1.366
34	43.99 / 1.732	40.64 / 1.600	1.68 / .066	1.68 / .066	37.24 / 1.466
36	46.53 / 1.832	43.18 / 1.700	1.68 / .066	1.68 / .066	39.78 / 1.566
38	49.07 / 1.932	45.72 / 1.800	1.68 / .066	1.68 / .066	42.32 / 1.666
40	51.61 / 2.032	48.26 / 1.900	1.68 / .066	1.68 / .066	44.86 / 1.766
42	54.15 / 2.132	50.80 / 2.000	1.68 / .066	1.68 / .066	47.40 / 1.866
44	56.69 / 2.232	53.34 / 2.100	1.68 / .066	1.68 / .066	49.94 / 1.966
46	59.23 / 2.332	55.88 / 2.200	1.68 / .066	1.68 / .066	52.48 / 2.066
48	61.77 / 2.432	58.42 / 2.300	1.68 / .066	1.68 / .066	55.02 / 2.166
50	64.31 / 2.532	60.96 / 2.400	1.68 / .066	1.68 / .066	57.56 / 2.266
52	66.85 / 2.632	63.50 / 2.500	1.68 / .066	1.68 / .066	60.10 / 2.366
54	69.39 / 2.732	66.04 / 2.600	1.68 / .066	1.68 / .066	62.64 / 2.466
56	71.93 / 2.832	68.58 / 2.700	1.68 / .066	1.68 / .066	65.18 / 2.566
58	74.47 / 2.932	71.12 / 2.800	1.68 / .066	1.68 / .066	67.72 / 2.666
60	77.01 / 3.032	73.66 / 2.900	1.68 / .066	1.68 / .066	70.26 / 2.766
62	79.55 / 3.132	76.20 / 3.000	1.68 / .066	1.68 / .066	72.80 / 2.866
64	82.09 / 2.232	78.74 / 3.100	1.68 / .066	1.68 / .066	75.34 / 2.966
66	84.63 / 3.332	81.28 / 3.200	1.68 / .066	1.68 / .066	77.88 / 3.066
68	87.17 / 3.432	83.82 / 3.300	1.68 / .066	1.68 / .066	80.42 / 3.166
70	89.71 / 3.532	86.36 / 3.400	1.68 / .066	1.68 / .066	82.96 / 3.266
72	92.25 / 3.632	88.90 / 3.500	1.68 / .066	1.68 / .066	85.50 / 3.366

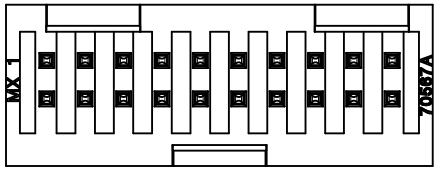

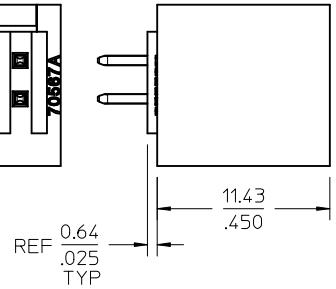

REV	DESCRIPTION
—	MODIFY HOUSING WALL EC NO: UCP2010-1587 DRWN:MSIBARRA 2010/01/12 CHKD:BBARKER 2010/01/12 APPR:SMILLER 2010/03/31

QUALITY SYMBOLS: F/V =0, F/C =0, F/P =0

GENERAL TOLERANCES (UNLESS SPECIFIED)

	mm	INCH
4 PLACES	± ---	± ---
3 PLACES	± ---	± .005
2 PLACES	± 0.13	± .010
1 PLACE	± 0.25	± ---
ANGULAR ±1/2°		

DRAFT WHERE APPLICABLE MUST REMAIN WITHIN DIMENSIONS

DIMENSION STYLE: MM/IN

SCALE: 4:1

DESIGN UNITS: INCH

THIRD ANGLE PROJECTION

DRAWN BY	EIK	DATE 1988/03/10
CHECKED BY	EIK	DATE 1988/03/10
APPROVED BY	SMILLER	DATE 2010/03/31

TITLE: 4 SIDES SHROUDED HEADER HIGH TEMP, (2.54)/.100 GRID W/ (0.64)/.025 PINS

MOLEX INCORPORATED

MATERIAL NO.: SEE TABLE

DOCUMENT NO.: SDA-70567-****

SHEET NO.: 1 OF 5

SIZE: C

OPTION B

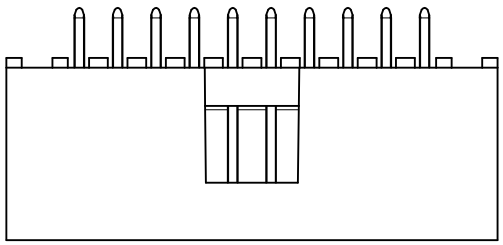

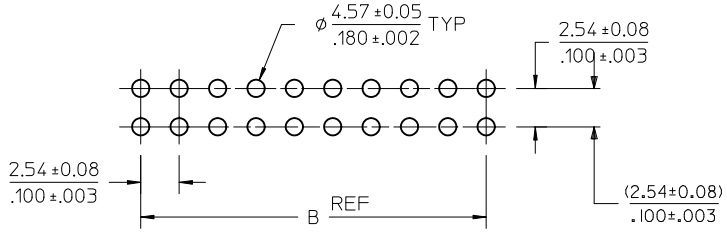

PCB LAYOUT: COMPONENT SIDE
TYPICAL PCB THICKNESS: 2.36/.093

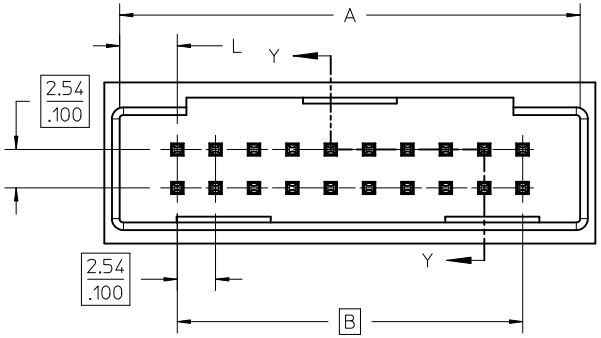

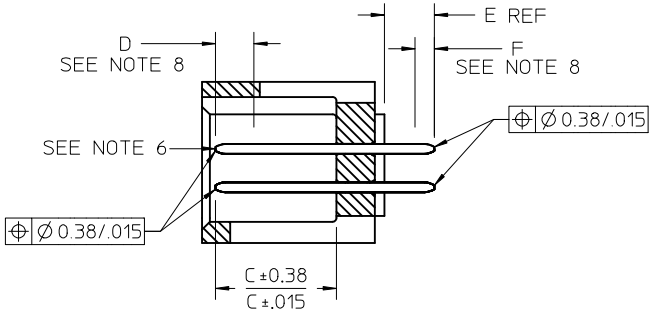

SECTION Y-Y

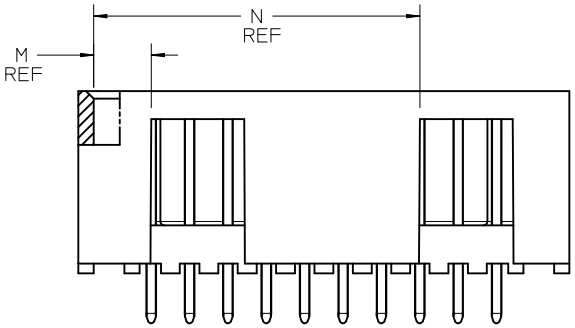

NOTES:
1. MATERIAL: SHROUDED WAFER: 30% G.F. LCP, COLOR: BLACK, 94V-0. PINS: COPPER ALLOY.
2. PLATING:
   TIN - (0.00381)/.000150 MINIMUM TIN OVER NICKEL UNDERPLATE OVERALL
   15 GOLD - (0.00038)/.000015 MINIMUM GOLD PLATE IN SELECTED AREA
   (0.00191)/.000075 MINIMUM TIN IN SELECTED AREA,
   OVER NICKEL UNDERPLATE OVERALL
   30 GOLD - (0.00076)/.000030 MINIMUM GOLD PLATE IN SELECTED AREA
   (0.00191)/.000075 MINIMUM TIN IN SELECTED AREA,
   OVER NICKEL UNDERPLATE OVERALL
3. PRODUCT SPECIFICATION: PS-70567.
4. PACKAGING: SEE CHARTS
5. PIN PUSHOUT FORCE: 4 LBS. MIN IN DIRECTION INDICATED.
6. FOR ILLUSTRATION PURPOSES, 20 (DUAL 10) CIRCUIT SIZE HEADER SHOWN.
7. PIN SOLDERABILITY PER MOLEX SPEC. SMES-152.
8. MEASURE POINT FOR PLATING THICKNESS.
9. WINDOW IS NOT AVAILABLE ON 6 CIRCUIT.
10. THIS PART CONFORMS TO CLASS B REQUIREMENTS OF COSMETIC SPECIFICATION PS-45499-002.
11. SEE SHEET 1 FOR ALL OTHER DIMENSIONS

CKT	DIM A	DIM B	DIM L	DIM M	DIM N
06	12.70 / .500	5.08 / .200	3.81 / .150	3.81 / .150	——
08	15.24 / .600	7.62 / .300	3.81 / .150	3.81 / .150	——
10	17.78 / .700	10.16 / .400	3.81 / .150	6.35 / .150	——
12	20.32 / .800	12.70 / .500	3.81 / .150	6.35 / .150	——
14	22.86 / .900	15.24 / .600	3.81 / .150	8.89 / .350	——
16	25.40 / 1.000	17.78 / .700	3.81 / .150	8.89 / .350	——
18	27.94 / 1.100	20.32 / .800	3.81 / .150	11.43 / .450	——
20	30.48 / 1.200	22.86 / .900	3.81 / .150	3.81 / .150	21.59 / .850
22	33.02 / 1.300	25.40 / 1.000	3.81 / .150	3.81 / .150	24.13 / .950
24	35.56 / 1.400	27.94 / 1.100	3.81 / .150	3.81 / .150	26.67 / 1.050
26	38.10 / 1.500	30.48 / 1.200	3.81 / .150	3.81 / .150	29.21 / 1.150
28	40.64 / 1.600	33.02 / 1.300	3.81 / .150	3.81 / .150	31.75 / 1.250
30	43.18 / 1.700	35.56 / 1.400	3.81 / .150	3.81 / .150	34.29 / 1.350
32	45.72 / 1.800	38.10 / 1.500	3.81 / .150	3.81 / .150	36.83 / 1.450
34	48.26 / 1.900	40.64 / 1.600	3.81 / .150	3.81 / .150	39.37 / 1.550
36	50.80 / 2.000	43.18 / 1.700	3.81 / .150	3.81 / .150	41.91 / 1.650
38	53.34 / 2.100	45.72 / 1.800	3.81 / .150	3.81 / .150	44.45 / 1.750
40	55.88 / 2.200	48.26 / 1.900	3.81 / .150	3.81 / .150	46.99 / 1.850
42	58.42 / 2.300	50.80 / 2.000	3.81 / .150	3.81 / .150	49.53 / 1.950
44	60.96 / 2.400	53.34 / 2.100	3.81 / .150	3.81 / .150	52.07 / 2.050
46	63.50 / 2.500	55.88 / 2.200	3.81 / .150	3.81 / .150	54.61 / 2.150
48	66.04 / 2.600	58.42 / 2.300	3.81 / .150	3.81 / .150	57.15 / 2.250
50	68.58 / 2.700	60.96 / 2.400	3.81 / .150	3.81 / .150	59.69 / 2.350
52	71.12 / 2.800	63.50 / 2.500	3.81 / .150	3.81 / .150	62.23 / 2.450
54	73.66 / 2.900	66.04 / 2.600	3.81 / .150	3.81 / .150	64.77 / 2.550
56	76.20 / 3.000	68.58 / 2.700	3.81 / .150	3.81 / .150	67.31 / 2.650
58	78.74 / 3.100	71.12 / 2.800	3.81 / .150	3.81 / .150	69.85 / 2.750
60	81.28 / 3.200	73.66 / 2.900	3.81 / .150	3.81 / .150	72.32 / 2.850
62	83.82 / 3.300	76.20 / 3.000	3.81 / .150	3.81 / .150	74.93 / 2.950
64	86.36 / 3.400	78.74 / 3.100	3.81 / .150	3.81 / .150	77.47 / 3.050
66	88.90 / 3.500	81.28 / 3.200	3.81 / .150	3.81 / .150	80.01 / 3.150
68	91.44 / 3.600	83.82 / 3.300	3.81 / .150	3.81 / .150	82.55 / 3.250
70	93.98 / 3.700	86.36 / 3.400	3.81 / .150	3.81 / .150	85.09 / 3.350
72	96.52 / 3.800	88.90 / 3.500	3.81 / .150	3.81 / .150	87.63 / 3.450

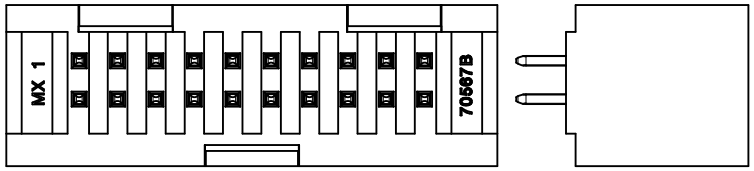

MODIFY HOUSING WALL
EC NO: UCP2010-1587 2010/01/12
DRWN:MS/BARRA 2010/01/12
CH'KD:BBARKER 2010/03/31
APPR:SMILLER
DESCRIPTION
REV —

QUALITY SYMBOLS
E =0
E =0
E =0

GENERAL TOLERANCES (UNLESS SPECIFIED)

	mm	INCH
4 PLACES	± ---	± ---
3 PLACES	± ---	± .005
2 PLACES	± 0.13	± .010
1 PLACE	± 0.25	± ---
ANGULAR ±1/2°		

DRAFT WHERE APPLICABLE MUST REMAIN WITHIN DIMENSIONS

DIMENSION STYLE: MM/IN
SCALE: 4:1
DESIGN UNITS: INCH
THIRD ANGLE PROJECTION

DRAWN BY	EIK	DATE 1988/03/10
CHECKED BY	EIK	DATE 1988/03/10
APPROVED BY	SMILLER	DATE 2010/03/31

TITLE: 4 SIDES SHROUDED HEADER HIGH TEMP, (2.54)/.100 GRID W/ (0.64)/.025 PINS

MOLEX INCORPORATED

MATERIAL NO.: SEE TABLE
DOCUMENT NO.: SDA-70567-****
SHEET NO.: 2 OF 5
SIZE: C

ENGINEERING NUMBER A-70567	MANUFACTURE RELEASE STATUS	E REF.	C ±.015 (0.38)	CONNECTOR END PLATING TYPE	D MEAS.	P.C. BOARD END PLATING TYPE	F MEAS.	PACKAGING INFORMATION PK-70873-
-0001/-0034	R.F.M.	.130 (3.30)	.315 (8.00)	TIN	.100 (2.54)	TIN	.050 (1.27)	0018
-0035/-0068	R.F.M.	.200 (5.08)	.315 (8.00)	TIN	.100 (2.54)	TIN	.050 (1.27)	0018
-0069/-0102	R.F.M.	.130 (3.30)	.315 (8.00)	15 GOLD	.100 (2.54)	TIN	.050 (1.27)	0018
-0103/-0136	R.F.M.	.200 (5.08)	.315 (8.00)	15 GOLD	.100 (2.54)	TIN	.050 (1.27)	0018
-0137/-0170	R.F.M.	.130 (3.30)	.315 (8.00)	30 GOLD	.100 (2.54)	TIN	.050 (1.27)	0018
-0171/-0204	R.F.M.	.200 (5.08)	.315 (8.00)	30 GOLD	.100 (2.54)	TIN	.050 (1.27)	0018

NO. OF CKTS	OPTION "A"		OPTION "A"		OPTION "A"		OPTION "A"		OPTION "A"		OPTION "A"								NO. OF CKTS
	EDP NUMBER	ENG NUMBER	EDP NUMBER	ENG NUMBER	EDP NUMBER	ENG NUMBER	EDP NUMBER	ENG NUMBER	EDP NUMBER	ENG NUMBER	EDP NUMBER	ENG NUMBER	EDP NUMBER	ENG NUMBER	EDP NUMBER	ENG NUMBER	EDP NUMBER	ENG NUMBER	
06	15-80-0061	A-70567-0001	70567-0035	A-70567-0035	15-80-0063	A-70567-0069	70567-0103	A-70567-0103	15-80-0065	A-70567-0137	70567-0171	A-70567-0171							06
08	15-80-0081	A-70567-0002	70567-0036	A-70567-0036	15-80-0083	A-70567-0070	70567-0104	A-70567-0104	15-80-0085	A-70567-0138	70567-0172	A-70567-0172							08
10	15-80-0101	A-70567-0003	70567-0037	A-70567-0037	15-80-0103	A-70567-0071	70567-0105	A-70567-0105	15-80-0105	A-70567-0139	70567-0173	A-70567-0173							10
12	15-80-0121	A-70567-0004	70567-0038	A-70567-0038	15-80-0123	A-70567-0072	70567-0106	A-70567-0106	15-80-0125	A-70567-0140	70567-0174	A-70567-0174							12
14	15-80-0141	A-70567-0005	70567-0039	A-70567-0039	15-80-0143	A-70567-0073	70567-0107	A-70567-0107	15-80-0145	A-70567-0141	70567-0175	A-70567-0175							14
16	15-80-0161	A-70567-0006	70567-0040	A-70567-0040	15-80-0163	A-70567-0074	70567-0108	A-70567-0108	15-80-0165	A-70567-0142	70567-0176	A-70567-0176							16
18	15-80-0181	A-70567-0007	70567-0041	A-70567-0041	15-80-0183	A-70567-0075	70567-0109	A-70567-0109	15-80-0185	A-70567-0143	70567-0177	A-70567-0177							18
20	15-80-0201	A-70567-0008	70567-0042	A-70567-0042	15-80-0203	A-70567-0076	70567-0110	A-70567-0110	15-80-0205	A-70567-0144	70567-0178	A-70567-0178							20
22	15-80-0221	A-70567-0009	70567-0043	A-70567-0043	15-80-0223	A-70567-0077	70567-0111	A-70567-0111	15-80-0225	A-70567-0145	70567-0179	A-70567-0179							22
24	15-80-0241	A-70567-0010	70567-0044	A-70567-0044	15-80-0243	A-70567-0078	70567-0112	A-70567-0112	15-80-0245	A-70567-0146	70567-0180	A-70567-0180							24
26	15-80-0261	A-70567-0011	70567-0045	A-70567-0045	15-80-0263	A-70567-0079	70567-0113	A-70567-0113	15-80-0265	A-70567-0147	70567-0181	A-70567-0181							26
28	15-80-0281	A-70567-0012	70567-0046	A-70567-0046	15-80-0283	A-70567-0080	70567-0114	A-70567-0114	15-80-0285	A-70567-0148	70567-0182	A-70567-0182							28
30	15-80-0301	A-70567-0013	70567-0047	A-70567-0047	15-80-0303	A-70567-0081	70567-0115	A-70567-0115	15-80-0305	A-70567-0149	70567-0183	A-70567-0183							30
32	15-80-0321	A-70567-0014	70567-0048	A-70567-0048	15-80-0323	A-70567-0082	70567-0116	A-70567-0116	15-80-0325	A-70567-0150	70567-0184	A-70567-0184							32
34	15-80-0341	A-70567-0015	70567-0049	A-70567-0049	15-80-0343	A-70567-0083	70567-0117	A-70567-0117	15-80-0345	A-70567-0151	70567-0185	A-70567-0185							34
36	15-80-0361	A-70567-0016	70567-0050	A-70567-0050	15-80-0363	A-70567-0084	70567-0118	A-70567-0118	15-80-0365	A-70567-0152	70567-0186	A-70567-0186							36
38	15-80-0381	A-70567-0017	70567-0051	A-70567-0051	15-80-0383	A-70567-0085	70567-0119	A-70567-0119	15-80-0385	A-70567-0153	70567-0187	A-70567-0187							38
40	15-80-0401	A-70567-0018	70567-0052	A-70567-0052	15-80-0403	A-70567-0086	70567-0120	A-70567-0120	15-80-0405	A-70567-0154	70567-0188	A-70567-0188							40
42	15-80-0421	A-70567-0019	70567-0053	A-70567-0053	15-80-0423	A-70567-0087	70567-0121	A-70567-0121	15-80-0425	A-70567-0155	70567-0189	A-70567-0189							42
44	15-80-0441	A-70567-0020	70567-0054	A-70567-0054	15-80-0443	A-70567-0088	70567-0122	A-70567-0122	15-80-0445	A-70567-0156	70567-0190	A-70567-0190							44
46	15-80-0461	A-70567-0021	70567-0055	A-70567-0055	15-80-0463	A-70567-0089	70567-0123	A-70567-0123	15-80-0465	A-70567-0157	70567-0191	A-70567-0191							46
48	15-80-0481	A-70567-0022	70567-0056	A-70567-0056	15-80-0483	A-70567-0090	70567-0124	A-70567-0124	15-80-0485	A-70567-0158	70567-0192	A-70567-0192							48
50	15-80-0501	A-70567-0023	70567-0057	A-70567-0057	15-80-0503	A-70567-0091	70567-0125	A-70567-0125	15-80-0505	A-70567-0159	70567-0193	A-70567-0193							50
52	15-80-0521	A-70567-0024	70567-0058	A-70567-0058	15-80-0523	A-70567-0092	70567-0126	A-70567-0126	15-80-0525	A-70567-0160	70567-0194	A-70567-0194							52
54	15-80-0541	A-70567-0025	70567-0059	A-70567-0059	15-80-0543	A-70567-0093	70567-0127	A-70567-0127	15-80-0545	A-70567-0161	70567-0195	A-70567-0195							54
56	15-80-0561	A-70567-0026	70567-0060	A-70567-0060	15-80-0563	A-70567-0094	70567-0128	A-70567-0128	15-80-0565	A-70567-0162	70567-0196	A-70567-0196							56
58	15-80-0581	A-70567-0027	70567-0061	A-70567-0061	15-80-0583	A-70567-0095	70567-0129	A-70567-0129	15-80-0585	A-70567-0163	70567-0197	A-70567-0197							58
60	15-80-0601	A-70567-0028	70567-0062	A-70567-0062	15-80-0603	A-70567-0096	70567-0130	A-70567-0130	15-80-0605	A-70567-0164	70567-0198	A-70567-0198							60
62	15-80-0621	A-70567-0029	70567-0063	A-70567-0063	15-80-0623	A-70567-0097	70567-0131	A-70567-0131	15-80-0625	A-70567-0165	70567-0199	A-70567-0199							62
64	15-80-0641	A-70567-0030	70567-0064	A-70567-0064	15-80-0643	A-70567-0098	70567-0132	A-70567-0132	15-80-0645	A-70567-0166	70567-0200	A-70567-0200							64
66	15-80-0661	A-70567-0031	70567-0065	A-70567-0065	15-80-0663	A-70567-0099	70567-0133	A-70567-0133	15-80-0665	A-70567-0167	70567-0201	A-70567-0201							66
68	15-80-0681	A-70567-0032	70567-0066	A-70567-0066	15-80-0683	A-70567-0100	70567-0134	A-70567-0134	15-80-0685	A-70567-0168	70567-0202	A-70567-0202							68
70	15-80-0701	A-70567-0033	70567-0067	A-70567-0067	15-80-0703	A-70567-0101	70567-0135	A-70567-0135	15-80-0705	A-70567-0169	70567-0203	A-70567-0203							70
72	15-80-0721	A-70567-0034	70567-0068	A-70567-0068	15-80-0723	A-70567-0102	70567-0136	A-70567-0136	15-80-0725	A-70567-0170	70567-0204	A-70567-0204							72

SEE SHEETS 1 & 2
EC NO: UCP2010-1587
DRWN:MSIBARRA 2010/01/12
CHK:DJBBARKER 2010/01/12
APPR:SMILLER 2010/03/31
DESCRIPTION
REV

QUALITY SYMBOLS
▽7 = 0
▽8 = 0
▽9 = 0

GENERAL TOLERANCES (UNLESS SPECIFIED)

	mm	INCH
4 PLACES	± ---	± ---
3 PLACES	± ---	± .005
2 PLACES	± 0.13	± .010
1 PLACE	± 0.25	± ---
ANGULAR ±1/2°		

DRAFT WHERE APPLICABLE MUST REMAIN WITHIN DIMENSIONS

DIMENSION STYLE: MM/IN
SCALE: 1:1
DESIGN UNITS: INCH
THIRD ANGLE PROJECTION

DRAWN BY: EIK DATE: 1988/03/10
CHECKED BY: EIK DATE: 1988/03/10
APPROVED BY: SMILLER DATE: 2010/03/31

TITLE: 4 SIDES SHROUDED HEADER HIGH TEMP, (2.54)/.100 GRID W/ (0.64)/.025 PINS

MOLEX INCORPORATED

MATERIAL NO.: SEE TABLE
DOCUMENT NO.: SDA-70567-****
SHEET NO.: 3 OF 5
SIZE: D

ENGINEERING NUMBER A-70567	MANUFACTURE RELEASE STATUS	E REF.	C .015 ± (0.38)	CONNECTOR END PLATING TYPE	D MEAS.	P.C. BOARD END PLATING TYPE	F MEAS.	PACKAGING INFORMATION PK-70873-
-0205/-0238	R.F.M.	.130 (3.30)	.315 (8.00)	TIN	.100 (2.54)	TIN	.050 (1.27)	0018
-0239/-0272	R.F.M.	.200 (5.08)	.315 (8.00)	TIN	.100 (2.54)	TIN	.050 (1.27)	0018
-0273/-0306	R.F.M.	.130 (3.30)	.315 (8.00)	15 GOLD	.100 (2.54)	TIN	.050 (1.27)	0018
-0307/-0340	R.F.M.	.200 (5.08)	.315 (8.00)	15 GOLD	.100 (2.54)	TIN	.050 (1.27)	0018
-0341/-0374	R.F.M.	.130 (3.30)	.315 (8.00)	30 GOLD	.100 (2.54)	TIN	.050 (1.27)	0018
-0375/-0408	R.F.M.	.200 (5.08)	.315 (8.00)	30 GOLD	.100 (2.54)	TIN	.050 (1.27)	0018

NO. OF CKTS	OPTION "B"		OPTION "B"		OPTION "B"		OPTION "B"		OPTION "B"		OPTION "B"								NO. OF CKTS
	EDP NUMBER	ENG NUMBER	EDP NUMBER	ENG NUMBER	EDP NUMBER	ENG NUMBER	EDP NUMBER	ENG NUMBER	EDP NUMBER	ENG NUMBER	EDP NUMBER	ENG NUMBER	EDP NUMBER	ENG NUMBER	EDP NUMBER	ENG NUMBER	EDP NUMBER	ENG NUMBER	
06	15-80-0067	A-70567-0205	70567-0239	A-70567-0239	15-80-0069	A-70567-0273	70567-0307	A-70567-0307	15-80-1061	A-70567-0341	70567-0375	A-70567-0375							06
08	15-80-0087	A-70567-0206	70567-0240	A-70567-0240	15-80-0089	A-70567-0274	70567-0308	A-70567-0308	15-80-1081	A-70567-0342	70567-0376	A-70567-0376							08
10	15-80-0107	A-70567-0207	70567-0241	A-70567-0241	15-80-0109	A-70567-0275	70567-0309	A-70567-0309	15-80-1101	A-70567-0343	70567-0377	A-70567-0377							10
12	15-80-0127	A-70567-0208	70567-0242	A-70567-0242	15-80-0129	A-70567-0276	70567-0310	A-70567-0310	15-80-1121	A-70567-0344	70567-0378	A-70567-0378							12
14	15-80-0147	A-70567-0209	70567-0243	A-70567-0243	15-80-0149	A-70567-0277	70567-0311	A-70567-0311	15-80-1141	A-70567-0345	70567-0379	A-70567-0379							14
16	15-80-0167	A-70567-0210	70567-0244	A-70567-0244	15-80-0169	A-70567-0278	70567-0312	A-70567-0312	15-80-1161	A-70567-0346	70567-0380	A-70567-0380							16
18	15-80-0187	A-70567-0211	70567-0245	A-70567-0245	15-80-0189	A-70567-0279	70567-0313	A-70567-0313	15-80-1181	A-70567-0347	70567-0381	A-70567-0381							18
20	15-80-0207	A-70567-0212	70567-0246	A-70567-0246	15-80-0209	A-70567-0280	70567-0314	A-70567-0314	15-80-1201	A-70567-0348	70567-0382	A-70567-0382							20
22	15-80-0227	A-70567-0213	70567-0247	A-70567-0247	15-80-0229	A-70567-0281	70567-0315	A-70567-0315	15-80-1221	A-70567-0349	70567-0383	A-70567-0383							22
24	15-80-0247	A-70567-0214	70567-0248	A-70567-0248	15-80-0249	A-70567-0282	70567-0316	A-70567-0316	15-80-1241	A-70567-0350	70567-0384	A-70567-0384							24
26	15-80-0267	A-70567-0215	70567-0249	A-70567-0249	15-80-0269	A-70567-0283	70567-0317	A-70567-0317	15-80-1261	A-70567-0351	70567-0385	A-70567-0385							26
28	15-80-0287	A-70567-0216	70567-0250	A-70567-0250	15-80-0289	A-70567-0284	70567-0318	A-70567-0318	15-80-1281	A-70567-0352	70567-0386	A-70567-0386							28
30	15-80-0307	A-70567-0217	70567-0251	A-70567-0251	15-80-0309	A-70567-0285	70567-0319	A-70567-0319	15-80-1301	A-70567-0353	70567-0387	A-70567-0387							30
32	15-80-0327	A-70567-0218	70567-0252	A-70567-0252	15-80-0329	A-70567-0286	70567-0320	A-70567-0320	15-80-1321	A-70567-0354	70567-0388	A-70567-0388							32
34	15-80-0347	A-70567-0219	70567-0253	A-70567-0253	15-80-0349	A-70567-0287	70567-0321	A-70567-0321	15-80-1341	A-70567-0355	70567-0389	A-70567-0389							34
36	15-80-0367	A-70567-0220	70567-0254	A-70567-0254	15-80-0369	A-70567-0288	70567-0322	A-70567-0322	15-80-1361	A-70567-0356	70567-0390	A-70567-0390							36
38	15-80-0387	A-70567-0221	70567-0255	A-70567-0255	15-80-0389	A-70567-0289	70567-0323	A-70567-0323	15-80-1381	A-70567-0357	70567-0391	A-70567-0391							38
40	15-80-0407	A-70567-0222	70567-0256	A-70567-0256	15-80-0409	A-70567-0290	70567-0324	A-70567-0324	15-80-1401	A-70567-0358	70567-0392	A-70567-0392							40
42	15-80-0427	A-70567-0223	70567-0257	A-70567-0257	15-80-0429	A-70567-0291	70567-0325	A-70567-0325	15-80-1421	A-70567-0359	70567-0393	A-70567-0393							42
44	15-80-0447	A-70567-0224	70567-0258	A-70567-0258	15-80-0449	A-70567-0292	70567-0326	A-70567-0326	15-80-1441	A-70567-0360	70567-0394	A-70567-0394							44
46	15-80-0467	A-70567-0225	70567-0259	A-70567-0259	15-80-0469	A-70567-0293	70567-0327	A-70567-0327	15-80-1461	A-70567-0361	70567-0395	A-70567-0395							46
48	15-80-0487	A-70567-0226	70567-0260	A-70567-0260	15-80-0489	A-70567-0294	70567-0328	A-70567-0328	15-80-1481	A-70567-0362	70567-0396	A-70567-0396							48
50	15-80-0507	A-70567-0227	70567-0261	A-70567-0261	15-80-0509	A-70567-0295	70567-0329	A-70567-0329	15-80-1501	A-70567-0363	70567-0397	A-70567-0397							50
52	15-80-0527	A-70567-0228	70567-0262	A-70567-0262	15-80-0529	A-70567-0296	70567-0330	A-70567-0330	15-80-1521	A-70567-0364	70567-0398	A-70567-0398							52
54	15-80-0547	A-70567-0229	70567-0263	A-70567-0263	15-80-0549	A-70567-0297	70567-0331	A-70567-0331	15-80-1541	A-70567-0365	70567-0399	A-70567-0399							54
56	15-80-0567	A-70567-0230	70567-0264	A-70567-0264	15-80-0569	A-70567-0298	70567-0332	A-70567-0332	15-80-1561	A-70567-0366	70567-0400	A-70567-0400							56
58	15-80-0587	A-70567-0231	70567-0265	A-70567-0265	15-80-0589	A-70567-0299	70567-0333	A-70567-0333	15-80-1581	A-70567-0367	70567-0401	A-70567-0401							58
60	15-80-0607	A-70567-0232	70567-0266	A-70567-0266	15-80-0609	A-70567-0300	70567-0334	A-70567-0334	15-80-1601	A-70567-0368	70567-0402	A-70567-0402							60
62	15-80-0627	A-70567-0233	70567-0267	A-70567-0267	15-80-0629	A-70567-0301	70567-0335	A-70567-0335	15-80-1621	A-70567-0369	70567-0403	A-70567-0403							62
64	15-80-0647	A-70567-0234	70567-0268	A-70567-0268	15-80-0649	A-70567-0302	70567-0336	A-70567-0336	15-80-1641	A-70567-0370	70567-0404	A-70567-0404							64
66	15-80-0667	A-70567-0235	70567-0269	A-70567-0269	15-80-0669	A-70567-0303	70567-0337	A-70567-0337	15-80-1661	A-70567-0371	70567-0405	A-70567-0405							66
68	15-80-0687	A-70567-0236	70567-0270	A-70567-0270	15-80-0689	A-70567-0304	70567-0338	A-70567-0338	15-80-1681	A-70567-0372	70567-0406	A-70567-0406							68
70	15-80-0707	A-70567-0237	70567-0271	A-70567-0271	15-80-0709	A-70567-0305	70567-0339	A-70567-0339	15-80-1701	A-70567-0373	70567-0407	A-70567-0407							70
72	15-80-0727	A-70567-0238	70567-0272	A-70567-0272	15-80-0729	A-70567-0306	70567-0340	A-70567-0340	15-80-1721	A-70567-0374	70567-0408	A-70567-0408							72

SEE SHEETS 1 & 2
EC NO: UCP2010-1587
DRWN:MSIBARRA 2010/01/12
CHKD:BBARKER 2010/01/12
APPR:SMILLER 2010/03/31
DESCRIPTION
REV
1

QUALITY SYMBOLS
▽=0
▽=0
▽=0

GENERAL TOLERANCES (UNLESS SPECIFIED)

	mm	INCH
4 PLACES	± ---	± ---
3 PLACES	± ---	± .005
2 PLACES	± 0.13	± .010
1 PLACE	± 0.25	± ---
ANGULAR ±1/2°		

DRAFT WHERE APPLICABLE MUST REMAIN WITHIN DIMENSIONS

DIMENSION STYLE: MM/IN
SCALE: 1:1
DESIGN UNITS: INCH
THIRD ANGLE PROJECTION

DRAWN BY: EIK DATE: 1988/03/10
CHECKED BY: EIK DATE: 1988/03/10
APPROVED BY: SMILLER DATE: 2010/03/31

TITLE: 4 SIDES SHROUDED HEADER HIGH TEMP, (2.54)/.100 GRID W/ (0.64)/.025 PINS

MOLEX INCORPORATED

MATERIAL NO.: SEE TABLE
DOCUMENT NO.: SDA-70567-****
SHEET NO.: 4 OF 5
SIZE: D

SPECIAL- WITH VOIDS

CKTS SIZE	ENGINEERING NUMBER A-70567	EDP NUMBER	E REF.	C ±.015 (0.38)	K ±.015 (0.38)	VOID CKTS		CONNECTOR END PLATING TYPE		D MEAS.	P.C. BOARD END PLATING TYPE		F MEAS.	PACKAGING INFORMATION PK-70873-
10	-9003	70567-9003	.130 (3.30)	.315 (8.00)	.415 (10.54)	10		GOLD		.100 (2.54)	TIN		.050 (.127)	0018

CIRCUIT NUMBERING CONVENTION
(10 CKT USED AS EXAMPLE)
KEYED SIDE

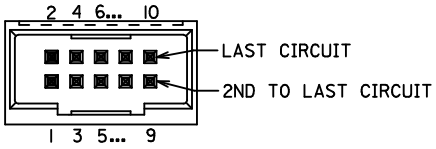

WINDOW SIDE

SEE SHEETS 1 & 2
EC NO: UCP2010-1587
DRWN:MS1BARRA 2010/01/12
CH'KD:BBARKER 2010/01/12
APPR:SMILLER 2010/03/31
DESCRIPTION
REV

QUALITY SYMBOLS
=0
=0
=0

GENERAL TOLERANCES (UNLESS SPECIFIED)

	mm	INCH
4 PLACES	±---	±---
3 PLACES	±---	±.005
2 PLACES	±0.13	±.010
1 PLACE	±0.25	±---
ANGULAR ±1/2°		

DRAFT WHERE APPLICABLE MUST REMAIN WITHIN DIMENSIONS

DIMENSION STYLE: MM/IN
SCALE: 4:1
DESIGN UNITS: INCH
THIRD ANGLE PROJECTION

DRAWN BY: EIK DATE: 1988/03/10
CHECKED BY: EIK DATE: 1988/03/10
APPROVED BY: SMILLER DATE: 2010/03/31

TITLE: 4 SIDES SHROUDED HEADER HIGH TEMP, (2.54)/.100 GRID W/ (0.64)/.025 PINS

MOLEX INCORPORATED

MATERIAL NO.: SEE TABLE
DOCUMENT NO.: SDA-70567-****
SHEET NO.: 5 OF 5
SIZE: C