Part Number: 0987801018

Status: Active

Description: 2.54mm (.100") Pitch, Male Header, PA 4.6, 6 Circuits, Dual Row, Black

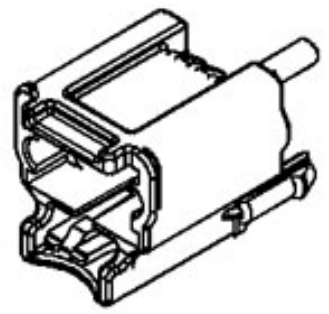

Series

image - Reference only

Documents:

Drawing (PDF)

RoHS Certificate of Compliance (PDF)

General

Product Family	Crimp Housings
Series	98780
Product Name	N/A

Physical

Circuits (maximum)	6
Gender	Female
Glow-Wire Compliant	No
Lock to Mating Part	Yes
Number of Rows	2
Packaging Type	Bag
Panel Mount	No
Pitch - Mating Interface (in)	0.100 In
Pitch - Mating Interface (mm)	2.54 mm
Pitch - Term. Interface (in)	0.100 In
Pitch - Term. Interface (mm)	2.54 mm
Polarized to Mating Part	Yes
Ports	1
Stackable	No
Temperature Range - Operating	-40°C to +80°C

Solder Process Data

Duration at Max. Process Temperature (seconds)	40
Lead-free Process Capability	SMC & Wave Capable (TH only)
Max. Cycles at Max. Process Temperature	1
Process Temperature max. C	265

Material Info

Old Part Number	18818EV6F8

Reference - Drawing Numbers

Sales Drawing	SD-98787-001

EU RoHS
ELV and RoHS Compliant
REACH SVHC
Not Reviewed
Halogen-Free Status
Not Reviewed

China RoHS

Need more information on product environmental compliance?

Email productcompliance@molex.com
For a multiple part number RoHS Certificate of Compliance, click here

Please visit the Contact Us section for any non-product compliance questions.

Search Parts in this Series
98780Series

Mates With
987861011 MOX Receptacle Housing

OVERALL DIMENSIONS

ENCOMBREMENT

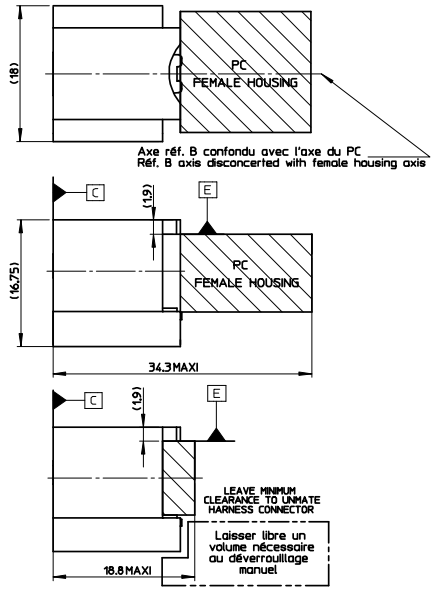

VARIANT PINS LOCATION

VARIANTE IMPLANTATION LANGUETTES

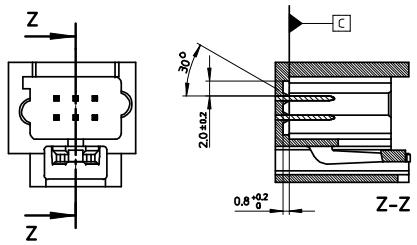

PINS POSITION

POSITION DES LANGUETTES

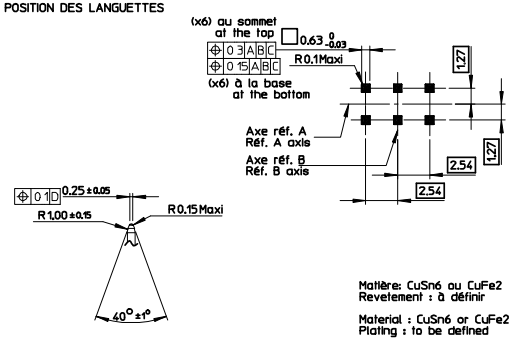

Matière: CuSn6 ou CuFe2
Revetement : à définir

Material : CuSn6 or CuFe2
Plating : to be defined

CODINGS / DETROMPAGES

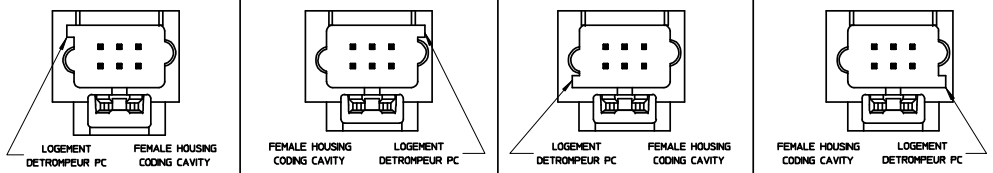

BLACK NOIR | BROWN MARRON | BLUE BLEU | GREY GRIS

BLACK CODING SHOWN

DETROMPAGE NOIR REPRESENTE

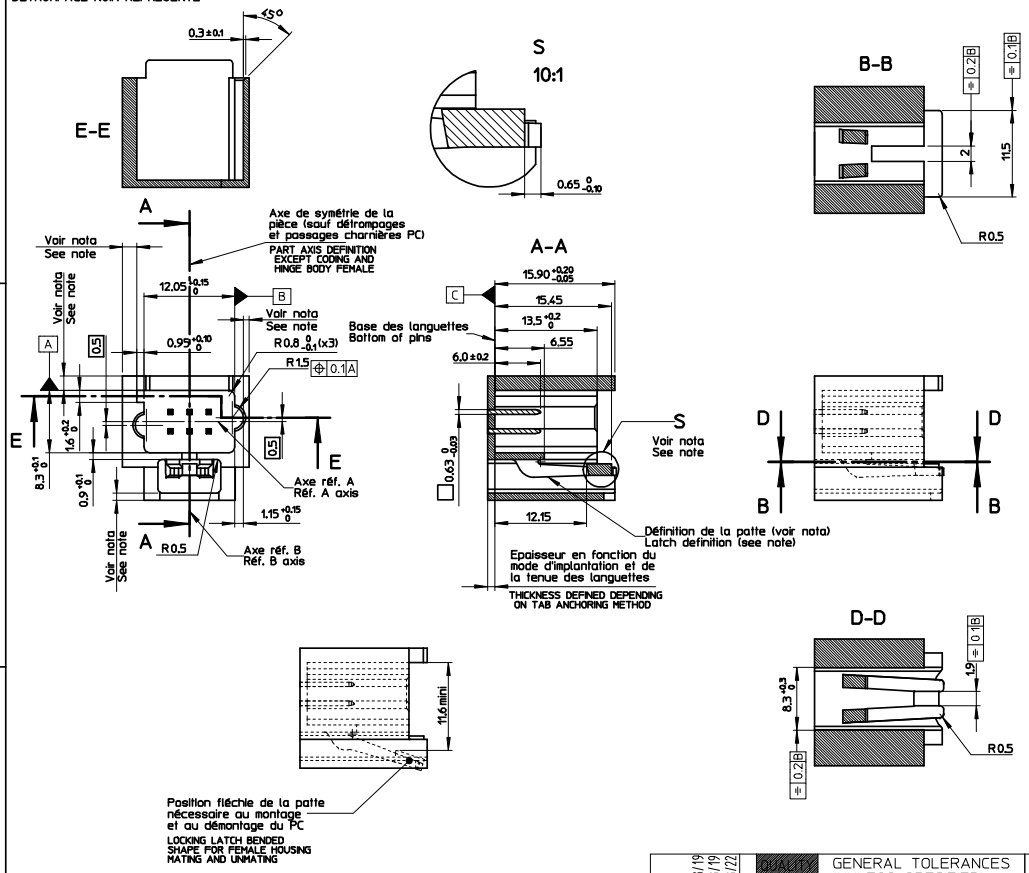

NOTA :
1 - COTATION ET GEOMETRIE A DEFINIR EN FONCTION DE LA MATIERE (VOIR PLANCHE 2)

NOTE :
1 - DIMENSIONS AND GEOMETRY TO BE DEFINED ACCORDING MATERIAL (SEE SHEET 2)

MODIFICATIONS

REV.	DESCRIPTIONS	NAME	DATE
A	X-RELEASED	PBO	07/03/15
B	SQUARE PINS: 0.63 0/-0.03 WAS 0.63 0/-0.30.	PGR	07/06/01
B1	SEE SHEET 2/2	VG	08/06/26

REVIEW NOTE
EC NO: G2008-0509
DRWN:VGUERIN 2008/08/19
CHKD:JDUCLOS 2008/08/19
APPR:LSTICKEIR 2008/08/22
DESCRIPTION
REV: B1

QUALITY SYMBOLS

GENERAL TOLERANCES (UNLESS SPECIFIED)

	mm	INCH
4 PLACES	± ---	± ---
3 PLACES	± ---	± ---
2 PLACES	± ---	± ---
1 PLACE	± 0.1	± ---
ANGULAR ± 1 °		

DRAFT WHERE APPLICABLE MUST REMAIN WITHIN DIMENSIONS

DIMENSION STYLE: MM ONLY
SCALE: 3:1
DESIGN UNITS: METRIC
FIRST ANGLE PROJECTION

DRAWN BY: PBOSQUAIN DATE: 2007/03/15
CHECKED BY: JDUCLOS DATE: 2007/03/15
APPROVED BY: LSTICKEIR DATE: 2007/03/15

TITLE: 6 CKT INTERFACE FEMALE HOUSING

MOLEX INCORPORATED

MATERIAL NO.: N/A
DOCUMENT NO.: SD-98787-001
SHEET NO.: 1 OF 2
SIZE: A1

THIS DRAWING CONTAINS INFORMATION THAT IS PROPRIETARY TO MOLEX INCORPORATED AND SHOULD NOT BE USED WITHOUT WRITTEN PERMISSION

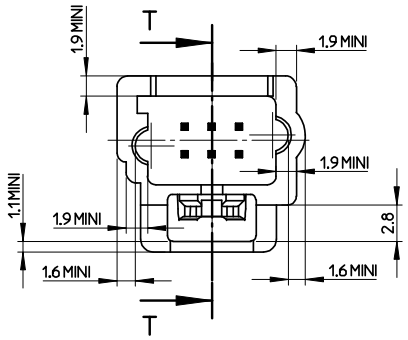

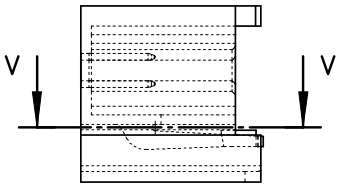

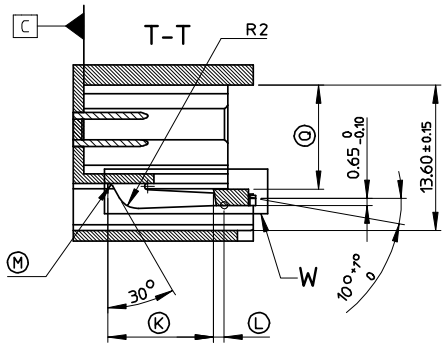

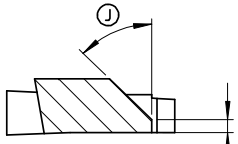

VARIANT
10:1

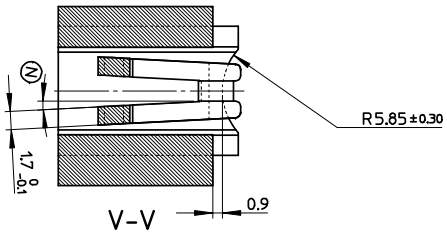

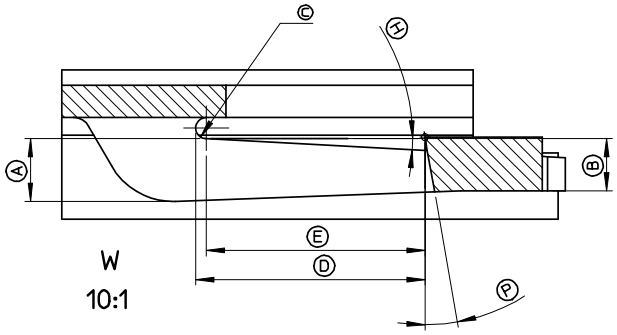

W
10:1

	PBT	PA 6.6	PA 4.6 30% FV PA 4.6 GF 30%
A	1.8 0 -0.1	2.1 0 -0.1	1.75 0 -0.1
B	1.5 0 -0.1	1.5 0 -0.1	0.85 ± 0.15
C	Ø6 +0.1 0	Ø6 +0.1 0	Ø1 ± 0.1
D			9.66 ± 0.1
E	6.15	6.15	
H	3°	3°	0° ± 30'
I	Pas de chanfrein No chamfer	Pas de chanfrein No chamfer	0.3 ± 0.1
J			30° ± 2°
K	9.6 ± 0.1	9.6 ± 0.1	12.81 ± 0.1
L	1 ± 0.1	1 ± 0.1	-
M	R0.5 ± 0.1	R0.5 ± 0.1	-
N	3° ± 1°	3° ± 1°	2.3° ± 1°
P	10° +1° 0	10° +1° 0	13°
Q	9.75 ± 0.1	9.75 ± 0.1	9.45 ± 0.1

NOTA :
1 - LES COTES SPECIFIEES SUR CETTE PLANCHE SONT VALABLES UNIQUEMENT POUR INFORMATION
2 - ELLES DOIVENT ETRE VALIDEES POUR CHAQUE APPLICATION DANS LE RESPECT DU C.D.C. FONCTIONNEL

NOTES :
1 - DIMENSIONS ON THIS SHEET ARE JUST FOR INFORMATION
2 - THEY MUST BE APPROVED FOR EACH APPLICATION IN ORDER TO MEET SPECIFICATION

MODIFICATIONS

REV.	DESCRIPTIONS	NAME	DATE
A	X-RELEASED	PBO	07/03/15
B	REVISION UPDATE FOLLOWING SHEET 1 REVISION.	PGR	07/06/01
B1	DIM A for the PA 4.6 : FROM 7.75 0/-0.1 TO 1.75 0/-0.1	VG	08/06/26

REVIEW NOTE
EC NO: G2008-0509
DRWN:VGUERIN 2008/08/19
CHKD:JLDUCLOS 2008/08/19
APPR:LSTICKEIR 2008/08/22
DESCRIPTION
REV B1

QUALITY SYMBOLS

GENERAL TOLERANCES (UNLESS SPECIFIED)

	mm	INCH
4 PLACES	± ---	± ---
3 PLACES	± ---	± ---
2 PLACES	± ---	± ---
1 PLACE	± 0.1	± ---
ANGULAR ± 1 °		

DRAFT WHERE APPLICABLE MUST REMAIN WITHIN DIMENSIONS

DIMENSION STYLE: MM ONLY
SCALE: 3:1
DESIGN UNITS: METRIC
FIRST ANGLE PROJECTION

DRAWN BY: PBOSQUAIN DATE: 2007/03/15
CHECKED BY: JDUCLOS DATE: 2007/03/15
APPROVED BY: LSTICKEIR DATE: 2007/03/15

TITLE: 6 CKT INTERFACE FEMALE HOUSING

MOLEX INCORPORATED

MATERIAL NO.: N/A
DOCUMENT NO.: SD-98787-001
SHEET NO.: 2 OF 2
SIZE: A2

THIS DRAWING CONTAINS INFORMATION THAT IS PROPRIETARY TO MOLEX INCORPORATED AND SHOULD NOT BE USED WITHOUT WRITTEN PERMISSION