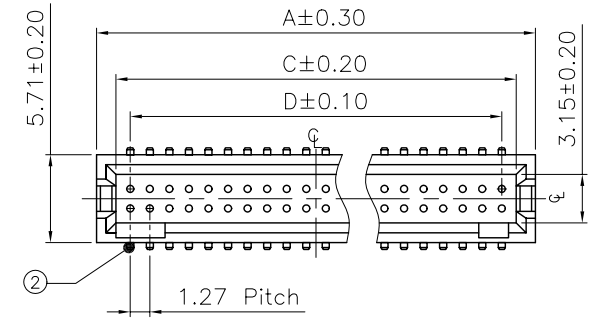


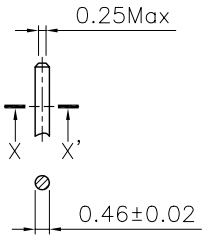


X–X' SECTION SCALE(4:1)

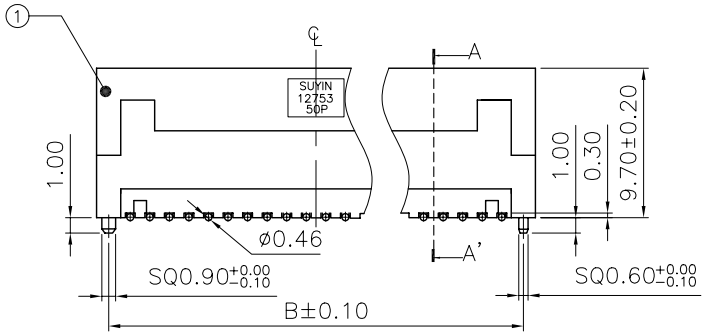


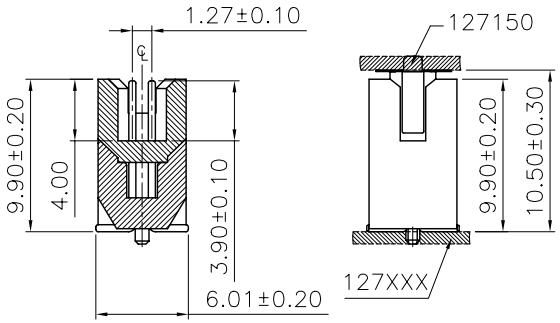


A–A' SECTION

Dimensional Information

| SUYIN P/NO. | PINS. | A | B | C | D |
|---|---|---|---|---|---|
| NOT RELEASE | 10 | 9.45 | 8.07 | 6.95 | 5.08 |
| NOT RELEASE | 12 | 10.72 | 9.34 | 8.22 | 6.35 |
| NOT RELEASE | 16 | 13.26 | 11.88 | 10.76 | 8.89 |
| NOT RELEASE | 18 | 14.53 | 13.15 | 12.03 | 10.16 |
| NOT RELEASE | 20 | 15.80 | 14.42 | 13.30 | 11.43 |
| NOT RELEASE | 22 | 17.07 | 15.69 | 14.57 | 12.70 |
| NOT RELEASE | 24 | 18.34 | 16.69 | 15.84 | 13.97 |
| NOT RELEASE | 28 | 20.88 | 19.50 | 18.38 | 16.51 |
| NOT RELEASE | 30 | 22.15 | 20.77 | 19.65 | 17.78 |
| NOT RELEASE | 40 | 28.50 | 27.12 | 26.00 | 24.13 |
| NOT RELEASE | 44 | 31.04 | 29.66 | 28.54 | 26.67 |
| 127178MA050G210ZR | 50 | 34.85 | 33.47 | 32.35 | 30.48 |
| NOT RELEASE | 60 | 41.20 | 39.82 | 38.70 | 36.83 |
| NOT RELEASE | 68 | 46.28 | 44.90 | 43.78 | 41.91 |
| NOT RELEASE | 70 | 47.55 | 46.17 | 45.05 | 43.18 |
| NOT RELEASE | 80 | 53.90 | 52.52 | 51.40 | 49.53 |
| NOT RELEASE | 90 | 60.25 | 58.87 | 57.75 | 55.88 |
| NOT RELEASE | 100 | 66.60 | 65.22 | 64.10 | 62.23 |
| NOT RELEASE | 120 | 79.30 | 77.92 | 76.80 | 74.93 |

RECOMMENDED P.C.B LAYOUT
(Component Side)

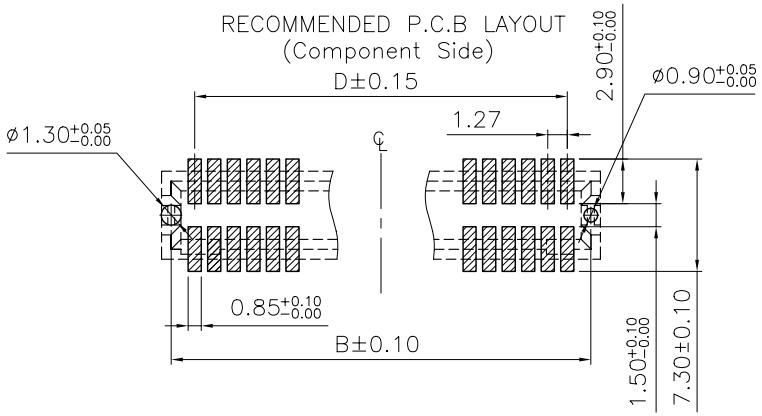


NOTE:
127178MAXXXG□10ZR
1

1.Selective plating
G1–5u"Min.Gold Plate over 30 u" min .Nicket.
＊G2–1u" min.Gold water plate over 30 u"min.Nicdel
G3–10u"Min.Gold Plate over 30 u" min .Nicket.
G4–15u"Min.Gold Plate over 30 u" min .Nicket.
G5–30u"Min.Gold Plate over 30 u" min .Nicket.

| NO. | DESCRIPTION | MATERIAL | COLOR | REMARK |
|---|---|---|---|---|
| 2 | Terminal | Brass | —— | Gold plated |
| 1 | Plastics | High Temp | BLACK | UL94V–0 |

SUYIN CONNECTOR

CUSTOMER COPY

TITLE: 1.27mmX1.27mm BOX HEADER S.M.D TYPE

| ECN (DCN) NO. | REV | DATE | DESCRIPTION | CHANGE | APPRO. |
|---|---|---|---|---|---|
| | 0 | | NEW | —— | —— |

| Angle | ±2° |
|---|---|
| 30 ~ | ±0.50 |
| 10 ~ 30 | ±0.30 |
| ~ 10 | ±0.15 |

GENERAL TOLERANCE UNLESS OTHERWISE NOTED

| | | |
|---|---|---|
| DRAW | | |
| DESIGN | | |
| CHECK | | |
| APPRO. | | |

| | |
|---|---|
| PART NO. | 127178MAXXXGX10ZR |
| PART NO. (OLD) | —— |
| DRAWING NO. D/ING | 127178MAXXXGX10ZR |
| SCALE 2:1 | UNIT mm A4 |

CH040624–30