REV.	DATE	DESCRIPTION
NC	10/08/02	INITIAL RELEASE
A	05/01/04	UPDATE DRAWING FORMAT
B	12/01/05	CHANGE COVER TO PASSIVATED S.S.

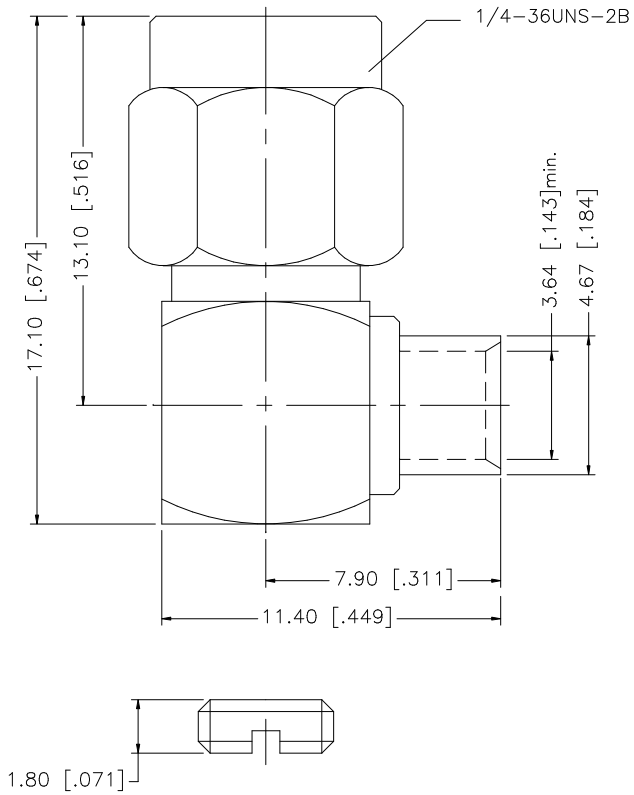

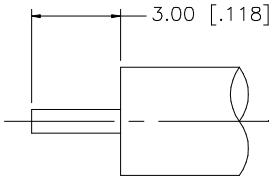

RECOMMENDED
CABLE STRIPPING DIM'S

NOTE:

1) CONTACT PIN TO SOLDER

	DESCRIPTION	MATERIAL	FINISH	QTY
8				
7				
6				
5				
4	COVER	PASSIVATED S.S.	PASSIVATED S.S.	1
3	CONTACT PIN	BER. COPPER	GOLD	1
2	INSULATOR	TEFLON	NATURAL	1
1	HOUSING/BODY	BRASS	GOLD	1

UNLESS OTHERWISE SPECIFIED DIMENSIONS ARE IN MILLIMETERS. DIMENSIONS IN [ ] ARE IN INCHES AND FOR CUSTOMER REFERANCE ONLY.

UNLESS OTHERWISE SPECIFIED TOLERANCES FOR MILLIMETERS ARE:

0.5 – 8mm ± 0.20mm
8 – 30mm ± 0.40mm
30 – 120mm ± 0.50mm

UNLESS OTHERWISE SPECIFIED TOLERANCES FOR INCHES ARE:

.020 – .315 = ± 0.007"
.315 – 1.180 = ± 0.015"
1.180 – 4.724 = ± 0.020"

DO NOT SCALE DRAWING

APPROVALS		DATE
DRAWN	G.R.S.	12/01/05
CHECKED		
ISSUED		
SHEET	1 OF 1	

CAD FILE C:/132/132201.DWG

Amphenol Connex

PART DESCRIPTION

SMA R/A DIRECT SOLDER PLUG
(FOR .141" SEMI-RIGID CABLE)

PART NO. 132201

DWG. NO.	REV.	SIZE	SCALE
132201.DWG	B	A	NA