used for: D-SUB COMBINATION

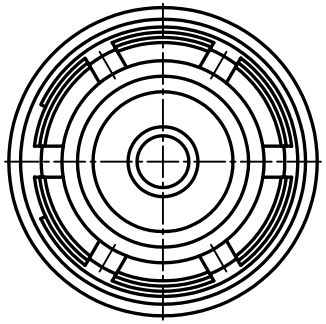

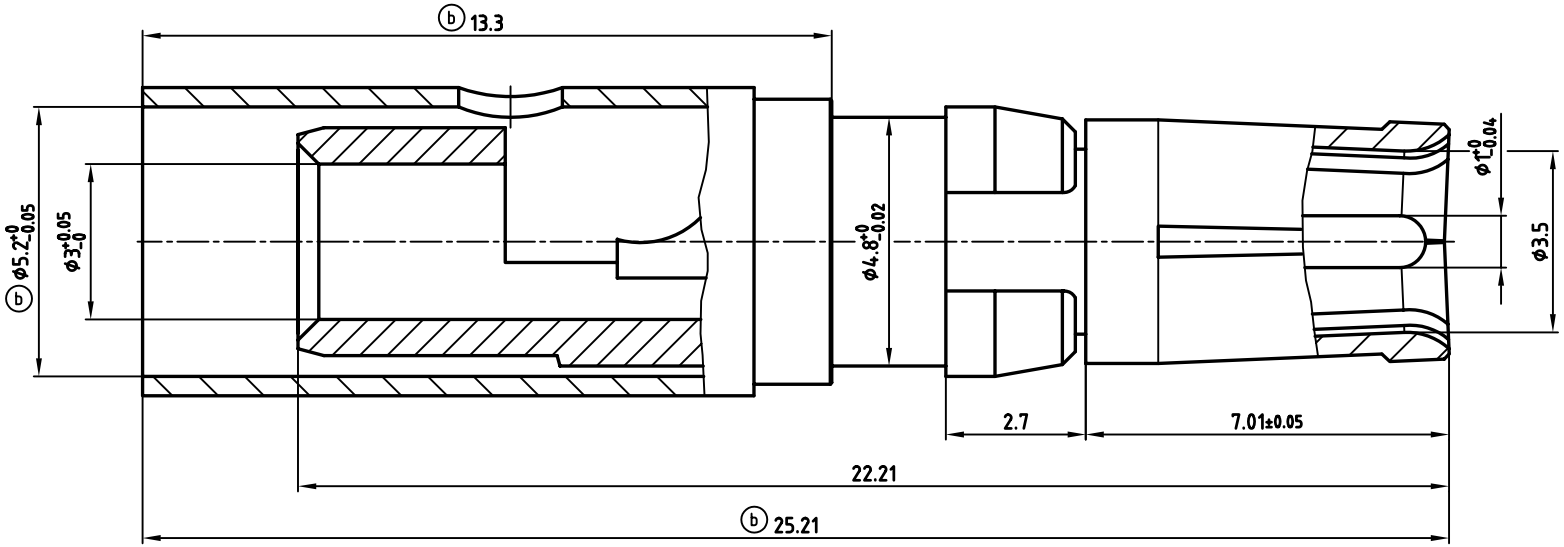

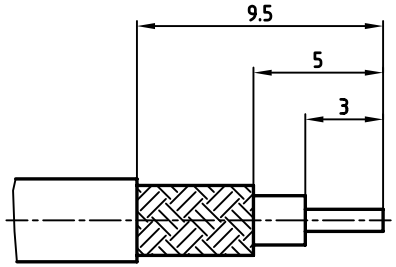

ⓑ STRIPPING DIMENSIONS

Directive 2002/95/EC „RoHS" Compliant

APPROVAL # FREIGABE # DEBLOCAGE # AUTOR/ZACION # APPROVAL

CUSTOMER APPROVAL DATE:

NAME: TITLE:

COMPANY NAME:

THIS DRAWING MAY NOT BE COPIED OR REPRODUCED IN ANY WAY, AND MAY NOT BE PASSED ON TO A THIRD PARTY WITHOUT WRITTEN PERMISSION. OWNERSHIP AND COPYRIGHT OF CONEC GmbH

DO NOT ALTER CAD DRAWING BY HAND

rev.	description	date	name
4 x b	Ä 2601	13.11.2006	Lehmen.
a	Origin		

tolerance

	date	name
2005		
drawn	16.11.	Lehmenkühler
appd.	16.11.	Mickenbecker
norm		
d-old		

CONEC®

scale: 10:1

material:

title:

COAXIAL CONTACT SOCKET 50 OHM

inner conductor for solder termination

outer conductor for crimp or solder termination

dwg no: 13K2A029A

AutoCAD 2004 | DIN-A 3 | sh: 1/1

part no: 132J20049X