VICOR CONFIDENTIAL

THIS DOCUMENT AND THE DATA DISCLOSED HEREIN OR HEREWITH IS NOT TO BE REPRODUCED, USED, OR DISCLOSED IN WHOLE OR IN PART TO ANYONE WITHOUT PERMISSION OF VICOR CORP.

REV	DESCRIPTION		DATE	APPROVED
01	RELEASED- ED20061	RCM	3/3/02	GCK

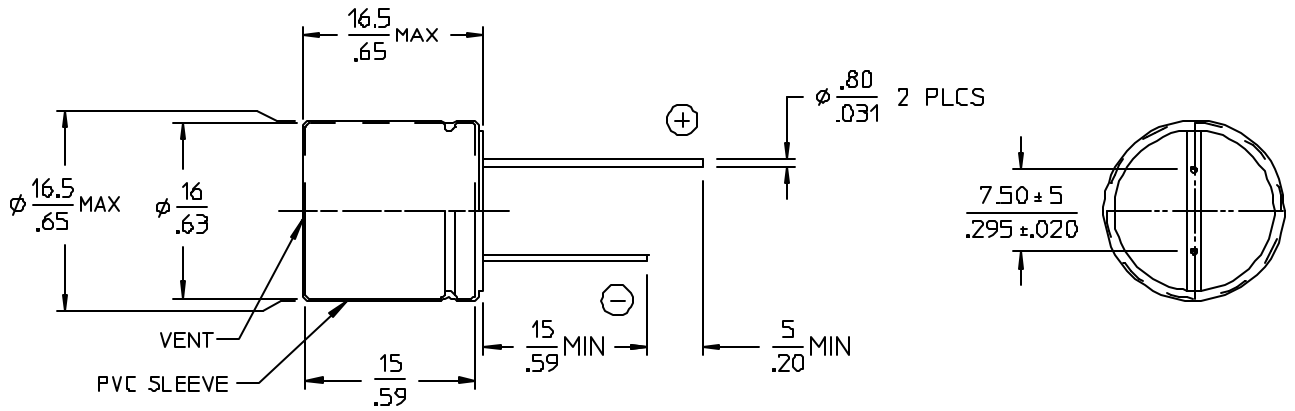

ELECTRICAL CHARACTERISTICS @ Ta= 20°C, 120Hz (UNLESS OTHERWISE SPECIFIED)

PARAMETER	SYMBOL	MIN	MAX	UNITS	TEST CONDITIONS
CAPACITANCE	C	1760	2640	uF	0.5Vrms
WORKING VOLTAGE	V_{DCW}	6.3		V	
SURGE VOLTAGE	V_{SURGE}	8		V	
LEAKAGE CURRENT	I_{DCL}		415.8	uA	1 MINUTE
DISSIPATION FACTOR	tan δ		0.24		
IMPEDANCE	Z		0.10 / 0.26	Ω	100KHZ, 20 °C / 100KHZ, -10 °C
RIPPLE CURRENT	I_{RIPPLE}		1100	mA	Ta= 105°C, 100KHZ
OPERATING TEMPERATURE RANGE	T_{OP}	-55	+105	°C	

NOTES:
1. *MATERIAL: ALUMINUM ELECTROLYTIC.*
2. *SOLVENT PROOF END SEAL.*
3. *DIMENSIONS ARE METRIC. / INCH*

MAXIMUM PERMISSIBLE RIPPLE CURRENT

FREQUENCY MULTIPLIER

FREQUENCY IN Hz					
50	120	300	1K	10K	100K
0.80	0.90	0.95	0.98	1.00	1.00

TEMPERATURE MULTIPLIER

TEMPERATURE	85°C	105°C
MULTIPLIER	1.75	1

DRAWN BY	DATE
GCK	01/14/02

UNLESS OTHERWISE SPECIFIED DIMENSIONS ARE IN INCHES- TOLERANCES ARE FRACTIONS ±1/64 DECIMALS .XX- ±.01 .XXX-±.005 ANGLES ±1°

THIRD ANGLE PROJECTION

DO NOT SCALE DRAWING

VICOR

CAPACITOR, ALEL, RADIAL, 2200uF, ±20%, 6.3V

SIZE	FSCM NO.	DWG NO	REV
B	67131	13438	01

SCALE 2X SHEET 1 OF 1