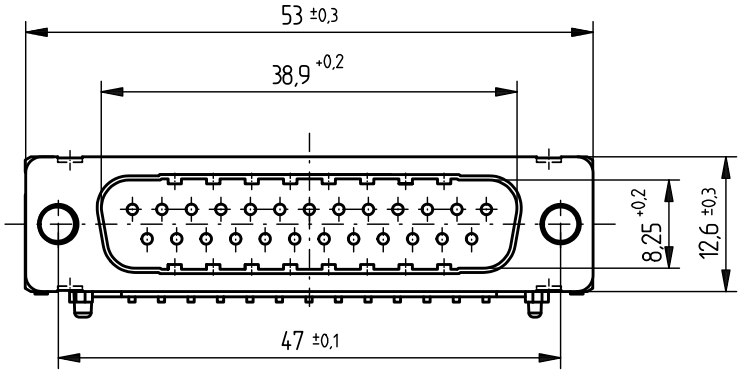


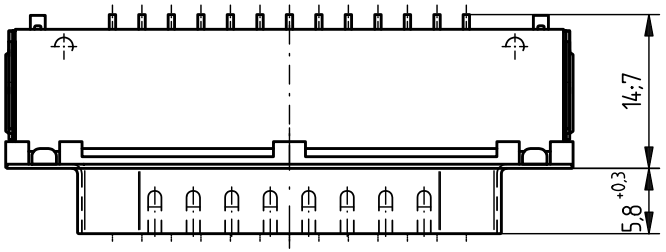


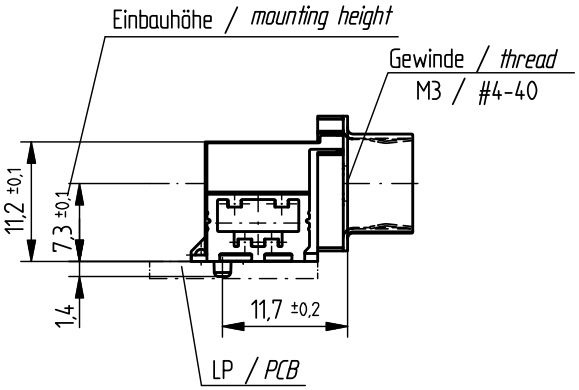


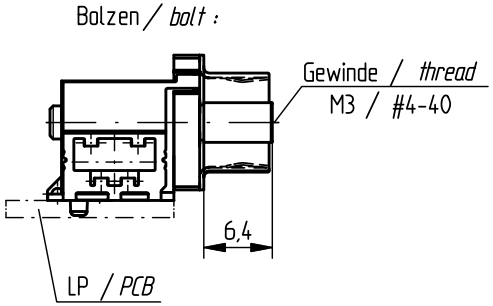


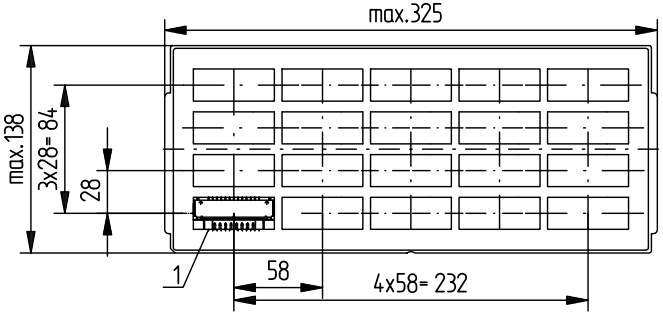


Verpackt in Tray
Verpackungseinheit 20 St.

*tray packaging*
*packaging unit 20 pcs*

Sonstige Angaben siehe 204629 / Additional indications please see 204629

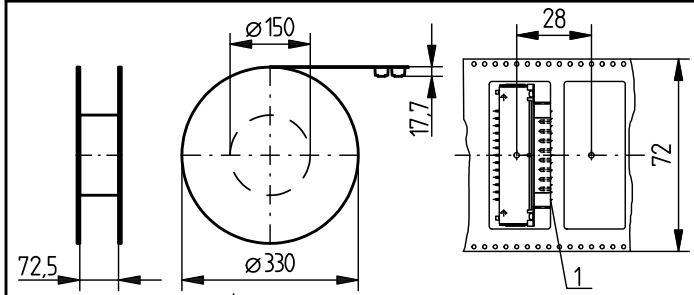


Verpackt in Gurt
Verpackungseinheit 75 St.

*tape & reel packaging*
*packaging unit 75 pcs*

Abspulrichtung
*reel off direction*

Sonstige Angaben siehe 204655/Additional indications please see 204655

## Layout

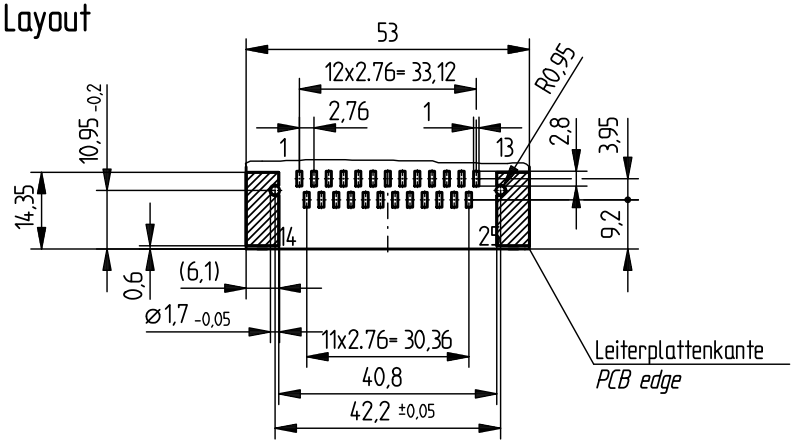


Fehlende Masse und Angaben siehe DIN 41652 / *Missing information and dimensions according to DIN 41652*

Sonstige Angaben siehe Fertigungsunterlagen / *Additional indications please see the production documentation*

Anschlussbereich verzinnt
*terminal area tin plating*

Koplanarität der Anschlüsse ≤ 0,1 mm
*coplanarity area of termination ≤ 0,1 mm*

Anforderungsstufe: 2
*class: 2*

| Ident-Nr *part-no. tape & reel* | Ident-Nr *part-no. tray* | ohne *without* | Mutter *thread* | Bolzen *bolt* | Bemerkung *remark* |
|---|---|---|---|---|---|
| 234942 | 174418 | ⌀3,2 | | | |
| | 154198 | | | #4-40 | |
| | 154197 | | | M 3 | |
| 374837 | 154196 | | #4-40 | | |
| | 154195 | | M 3 | | |

Consider protection memo from DIN 34

Information:

Tolerances ISO 2768-m

All Dimensions in mm

Scale 2:1

All rights reserved.
Only for information.
To insure that this is the latest version of this drawing, please contact one of the ERNI companies before using.

Subject to modification without prior notice.
Drawing will not be updated.

Designation
TMC-P 25-SMD-Standard
*TMC-P 25-SMD-Standard*

ERNI www.ERNI.com

144845 | 1

| Index | Date | |
|---|---|---|
| i | 15.04.2009 | |

V:00067810.SZA

TMCP