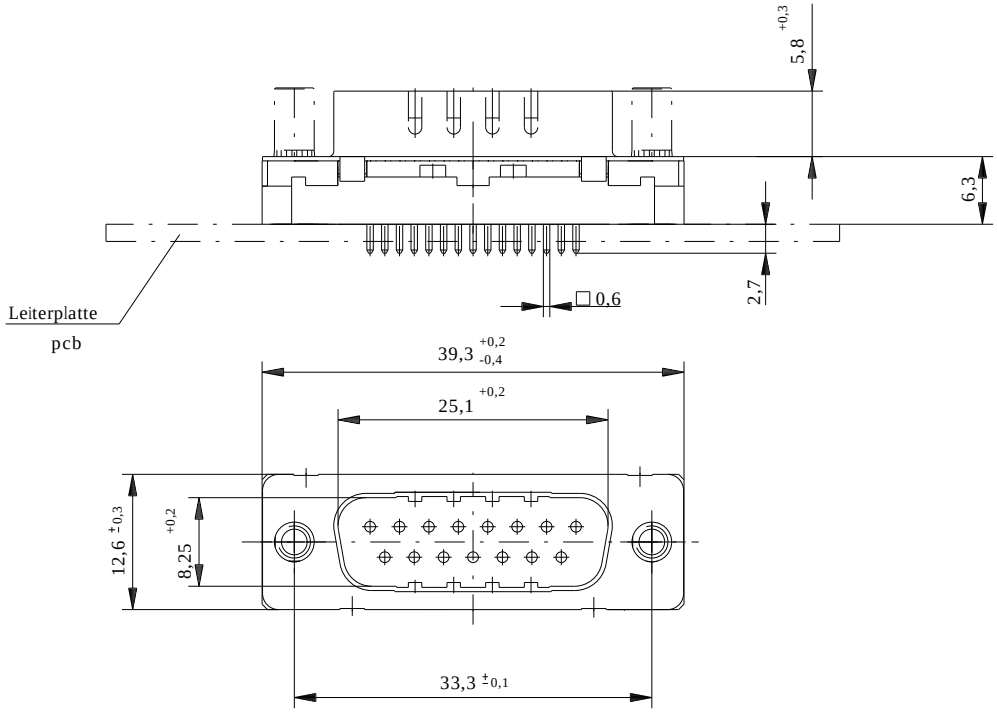

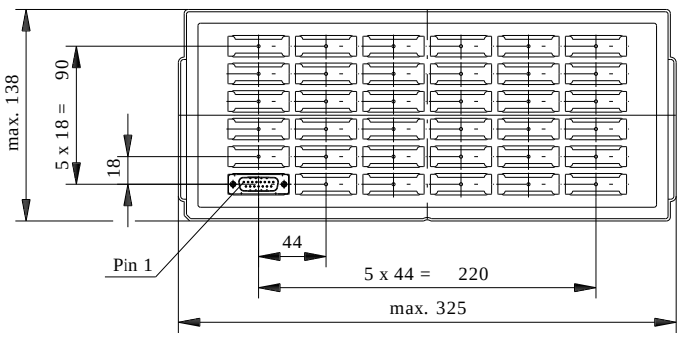

Verpackt in Tray
Verpackungseinheit 36 St.
tray packaging
packaging unit 36 pcs

Layout:

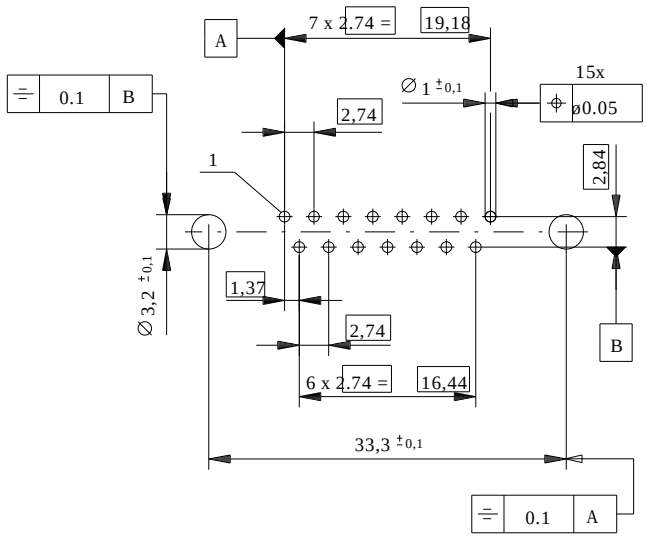

ohne / without

Durchgangsloch ø3,5
through hole ø3.5

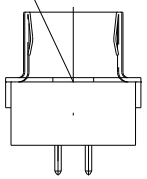

Mutter / nut :

Gewinde / thread
M3 / #4-40

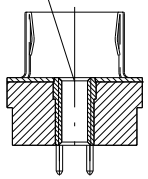

Bolzen / bolt :

Gewinde / thread
M3 / #4-40

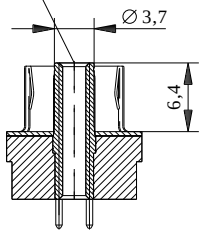

Bolzen / bolt :

Gewinde / thread
M3 - #4-40 /
#4-40 - M3

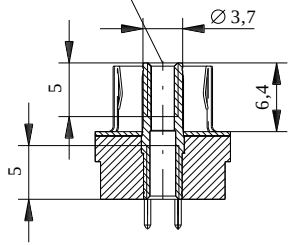

Anschlussbereich verzinnt
terminal area tin plating

Anforderungsstufe: 2
class: 2

Ident-Nr part-no.	ohne without	Mutter thread	Bolzen bolt	Bemerkung remark
214717	ø3,5			
214722			#4-40	
214721			M 3	
214720			#4-40-M3	
214719		#4-40		
214718		M 3		

Fehlende Masse und Angaben siehe DIN 41652 / Missing information and dimensions according to DIN 41652

Sonstige Angaben siehe Fertigungsunterlagen / Additional indications please see the production documentation

Information:

Tolerances

All Dimensions in mm

Scale 2:1

All rights reserved.
Only for information.
To insure that this is the latest version of this drawing, please contact one of the ERNI companies before using.

Subject to modification without prior notice.
Drawing will not be updated.

Designation

TMC-P 15-TLSV-2,7-6,3-BA8

TMC-P 15-TLSV-2,7-6,3-type 8

ERNI www.ERNI.com

144991

1

Index | Date | H:00046160.SZA | TMCP

Consider protection memo from DIN 34