ETRI® 146D

3,15” x 3,15” x 0,984” 80 x 80 x 25 mm

DC Axial Fans

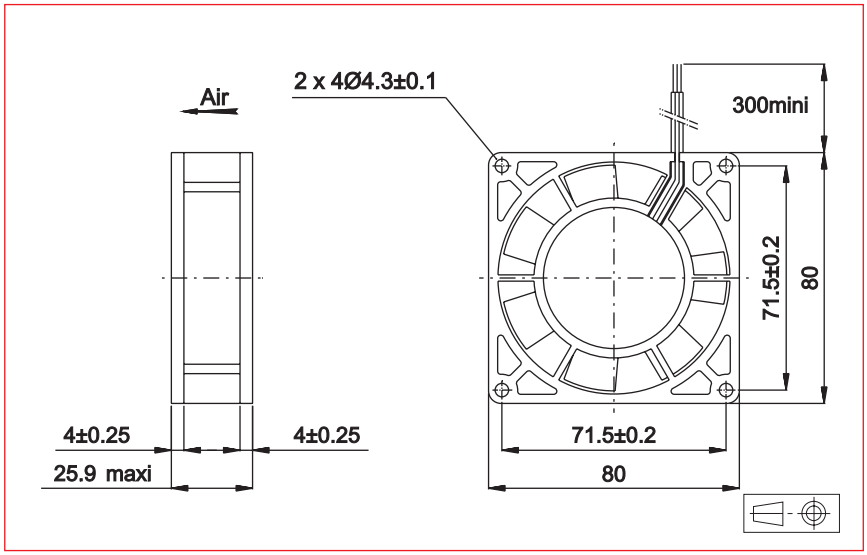

Approvals

CE

Life expectancy

L-10 LIFE AT 40°C:
80 000 hours

Brushless DC Motor
Electrical protection: integrated circuit
Housing material: plastic UL 94 VO
Impeller material: plastic UL 94 VO
Weight: 144 g
Bearing system: ball bearings

Available with:
- Speed sensor

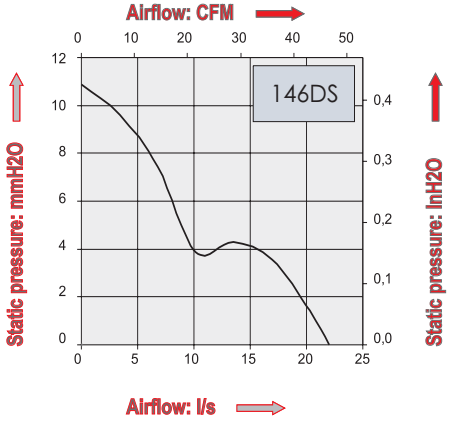

Part Number	Nominal voltage	Airflow	Noise level	Nominal speed	Input Power	Voltage range	Connection type		Operating temperature	
	V	l/s	dB(A)	RPM	W	V	Leads	Terminals	Min.°C	Max.°C
146DS1LP11000	12	22,0	44	5585	7	(6-13,8)	X		-15	55
146DS2LP11000	24	22,0	44	5585	7	(15-28)	X		-15	55
146DS4LP11000	48	22,0	44	5585	7	(28-56)	X		-15	55

Additional versions:
IP54: consult factory

Accessories:
Refer to Accessories leaflet

Non contractual document. Specifications are subject to change without prior notice. Pictures for information only. Edition 2008