Mechanical data (according to IEC 61076-2-101)		Material	
no. of poles / coding	8 / A	housing	V4A
contact termination	dip solder / socket	contact carrier colour	PA 66 / UL 94 V0 black
contact-∅	0.8mm		
temperature range	-40 °C / +85 °C	wire	-
protection class	IP 67	cross section	-
mating cycles	>100	contacts / surface	CuZn / Au
locking system	M12 STANDARD	sealing gasket	FKM
		potting	PU 2k / UL 94 V0

further information:
- see technical data M12-1
- see installation recommendation PG9 design DSI

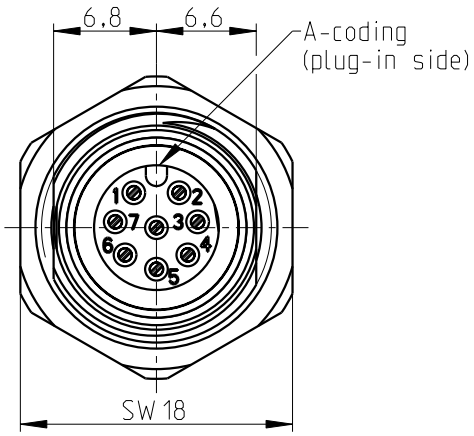

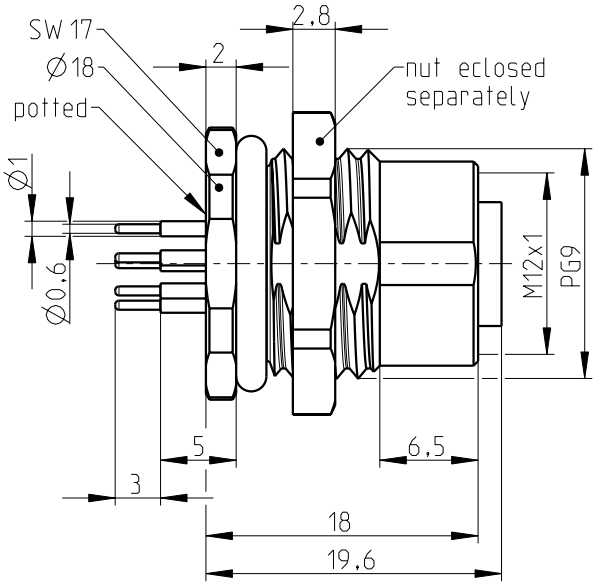

All specified data refers to the mounted M12 installation plugs ≥ IP54 and requires that the connector pair be correctly plugged and locked. Influences from wires, cables or PCB mounting are also to be taken into consideration.

View of pin assignment Plug-in side

PCB-layout
(advice)

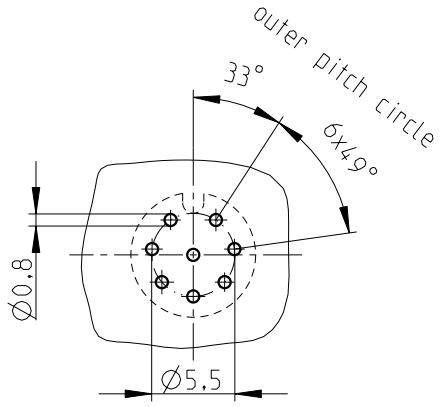

Position PCB-layout to
cutout device

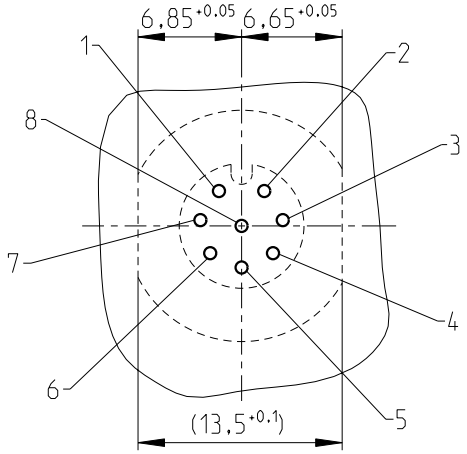

general tolerance acc. to DIN ISO 2768-c			technical changes reserved	Index 2 / 2012-05-15	scale: 2:1
	date	name	description: Housing with dip solder contacts Rear mounting (PG9)		page: 1 of: 1
design	2012-04-25	Thumm			
chk.					

drawing-no.:	BA-08S2N22RW00	doc.-no.:	00658233
order-no.:	1529797		
article designation:	SACC-DSI-M12FS-5CON-L180 VA		

PHOENIX CONTACT

The copying, distribution and utilisation of this document as well as the communication of the contents to others without expressed authorization is prohibited according to §18 UWG German Law. Offenders will be held liable for the payment of damages according to §19 UWG German Law. All rights reserved, in particular the right to carry out patent, utility model or ornamental design registrations.

Weitergabe sowie Vervielfältigung dieses Dokuments, Verwertung und Mitteilung seines Inhalts gem §18 UWG verboten, soweit nicht ausdrücklich gestattet. Zuwiderhandlungen verpflichten zu Schadenersatz (§19 UWG). Alle Rechte vorbehalten, insbesondere das Recht, Patent-, Gebrauchsmuster- oder Geschmacksmusteranmeldungen durchzuführen. CONINVERS GmbH Heisenbergstrasse 1 D-71083 Herrenberg