OSC70504P-1.8432MHZ

■Features

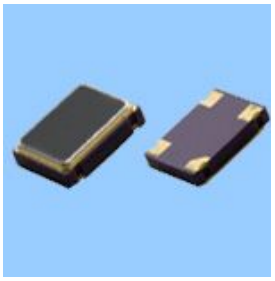

- ●Low power supply voltage(1.8V)
- ●LVPECL output level.
- ●Supports a WIDE FREQUENCY RANGE(32.768KHZ to 160 MHZ)
- ●Low phase jitter:Max,1ps
- ●Compact with dimensions of 7.0*5.0*1.4mm.

■Specifications

项目Item		技术Specifications
频率范围Freq.Range		1.8432MHZ
频率稳定性Frequency Stabilityu		±10PPm,±20PPm ±30PPm,±50PPm
工作温度Operaing Temp		-10℃ to 60℃ -20℃ to 70℃ -40℃ to 85℃
储存温度Storange Temp		-40℃ to 85℃ -55℃ to 125℃
输入电压Input		+5Vdc±10% or +3.3Vdc±5% +1.8Vdc±3%
占空比 Symmetry		40/60 Standard
输出Output Load		10 TTL or 15PF HCMOS
消耗电流	Current Consumption 15pf only) (5.0V)	1.000MHZ - 36.000MHZ = 25mA max
		36.000MHZ - 70.000MHZ = 60mA max
		70.000MHZ - 150.000MHZ = 80mA max
	Current Consumption 15pf only) (1.8V,2.5V,2.85V,3.3V)	1.000MHZ - 36.000MHZ = 20mA max
		36.000MHZ - 70.000MHZ = 40mA max
		70.000MHZ - 150.000MHZ = 60mA max
上升/下降时间Rise/Fall Time		10nS max

■Dimensions

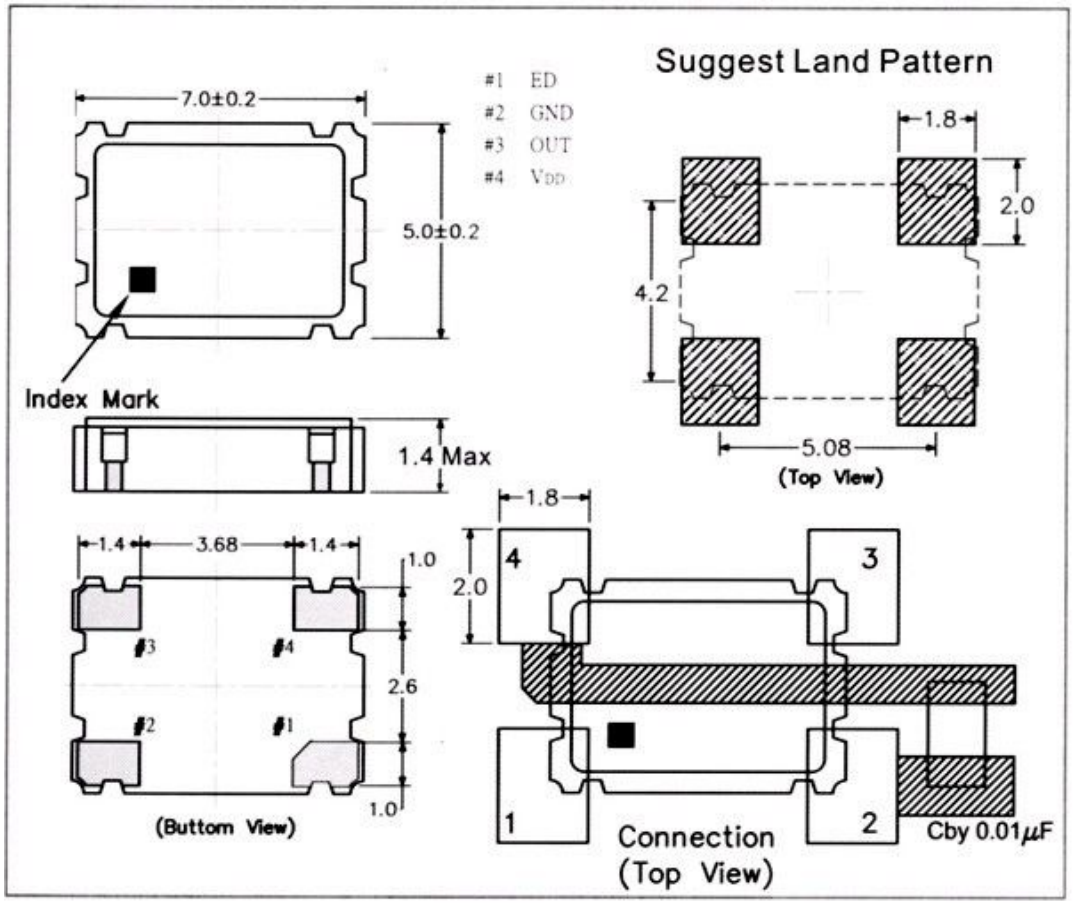

■Ordering Information

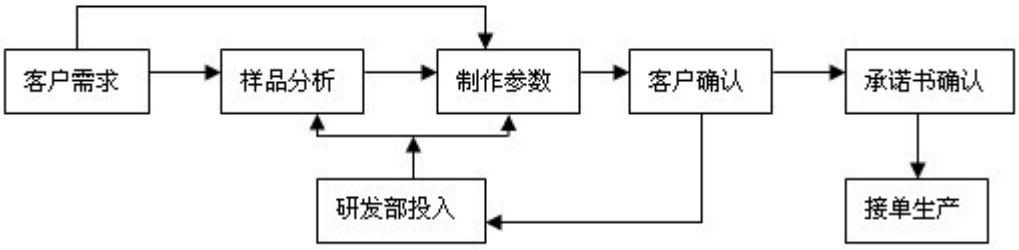

■使用电路图和引出端功能说明

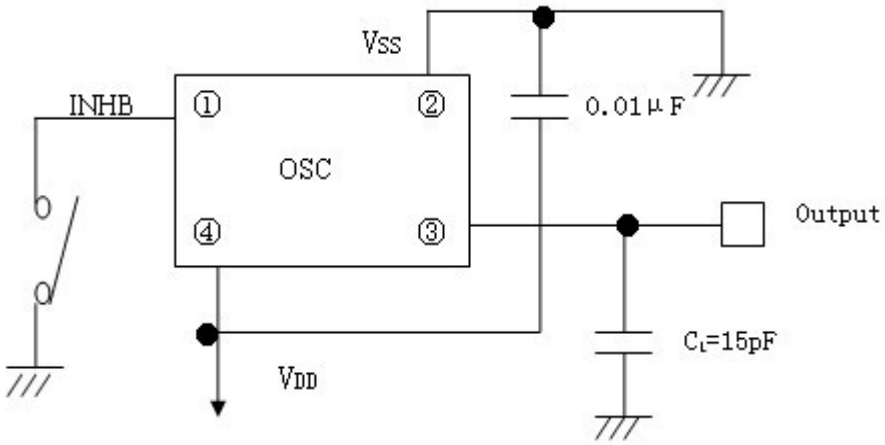

引脚	1	2	3	4
功能	输出状态控制/NC	地VSS	输出QOUT	电源VDD

输出控制端INHB	"H"高电平或开路OPEN	"L"低电平（三态）
输出Qout	振荡器正常输出	高阻抗

注意：输出状态控制端INHB（三态端）不能接地，否则振荡器呈高阻抗

■测试电路图

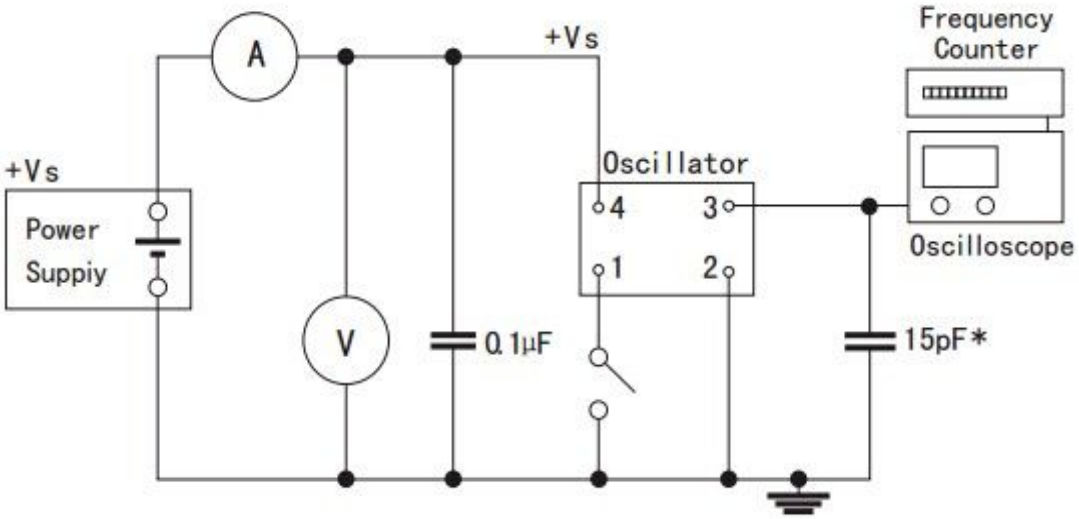

■Reflow Condition

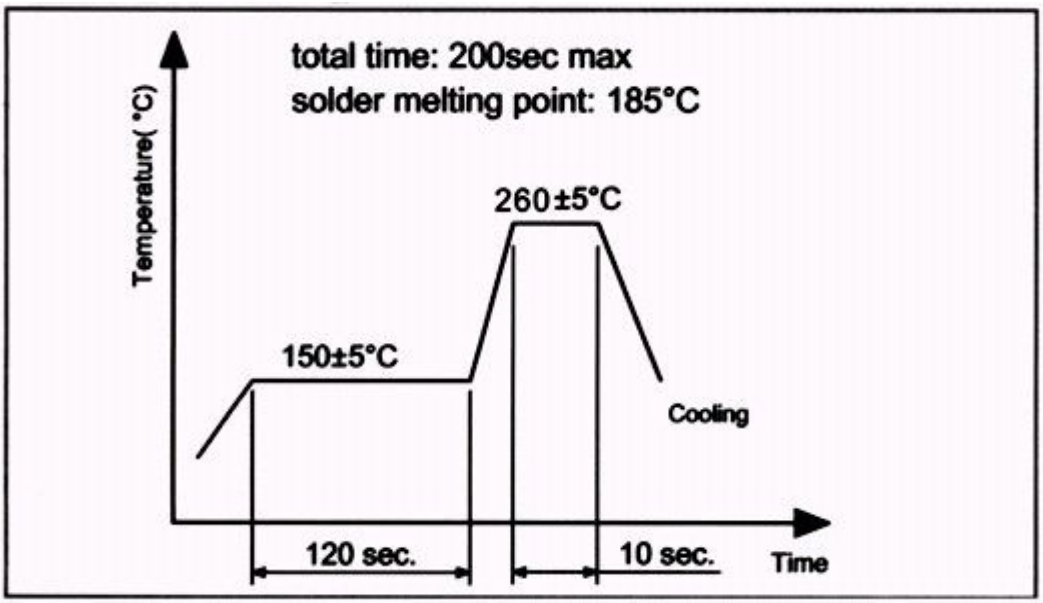

■输出波形图

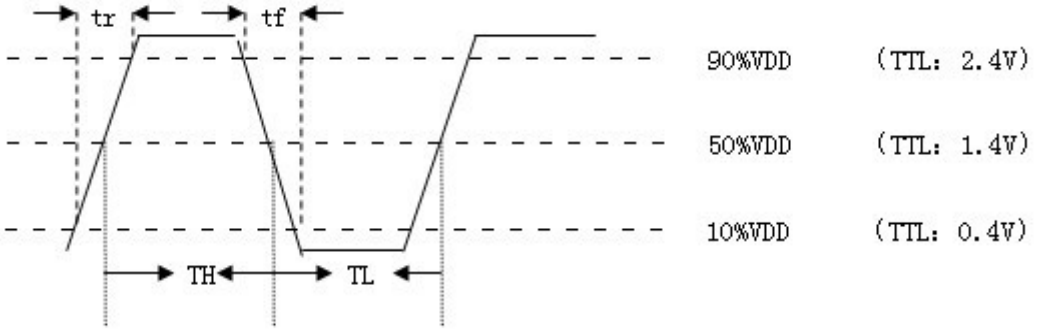

■编带尺寸图TAPE：

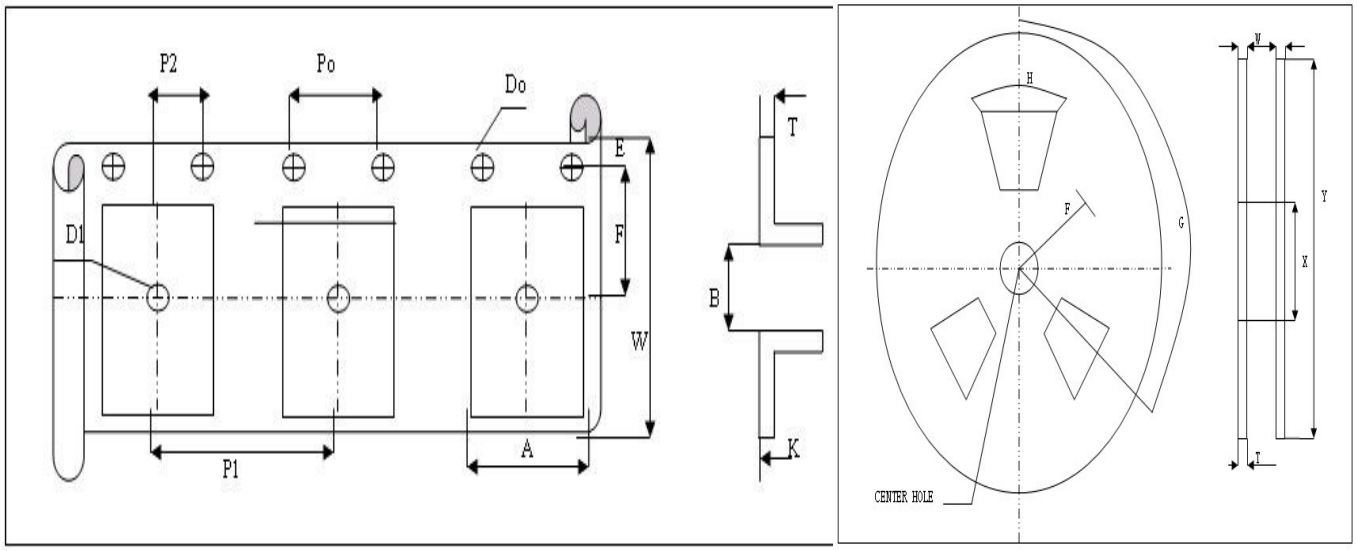

Symbol		A	B	Do	D1	E	
DIMENSION	7*5	5.5	7.5	1.5	1.5	1.75	
Symbol		K	Po	P1	P2	T	
DIMENSION	7*5	1.9	4	8	2	0.3	Unit :mm
Symbol		H	F	G	W	T	Y
Dimension	7*5	40°	21±0.8	120	17.5	2	250