IST8306
3D Magnetometer

Brief Datasheet

Table of Contents

1 GENERAL DESCRIPTION 3

2 BLOCK DIAGRAM, PACKAGE DIMENSION AND APPLICATION CIRCUIT ... 4

2.1 Block Diagram 4

2.2 Package Dimensions and Magnetic Field Directions 4

2.3 Marking Information 5

2.4 Pin Configurations and Functions 5

2.5 Application Circuit 6

3 ELECTRICAL SPECIFICATIONS 7

3.1 Absolute Maximum Ratings 7

3.2 Recommended Operating Conditions 7

3.3 Electrical Specifications 7

3.4 Magnetic Sensor Specifications 8

4.5 Power On Reset (POR) Specifications 8

4 TECHNOLOGY OVERVIEW 9

4.1 AMR Technology 9

4.2 High Reliability Monolithic Design 9

4.3 Ultra-low Hysteresis Design 9

4.4 Magnetic Setting Mechanism 9

5 ORDERING INFORMATION 10

1 General Description

iSentek IST8306 is a 3-axis digital magnetometer with 0.8 × 0.8 × 0.53 mm^3, 4-pin WLCSP-BGA package. It is an integrated chip with 3-axis magnetic sensors, digital control logic, built-in temperature compensation circuit and self-test function. IST8306 provides an I^2C digital output with fast mode up to 400 kHz. The high output data rate, ultra-low noise, ultra-low hysteresis and excellent output stability over working temperature range make it a perfect product for high applications requiring high outstanding accuracy.

Features

- Monolithic 3-axis magnetic sensor
- Ultra-compact package size of 0.8 × 0.8 × 0.53 mm^3, 4-pin WLCSP-BGA package
- I^2C slave, Fast Mode up to 400 kHz
- Wide dynamic range of ±3000 uT for each axis
- Maximum 200Hz output data rate
- Ultra-low hysteresis (~0.1 %FS)
- Low suspend current of 1uA
- Wide operating temperature range
- High precision temperature compensation
- Built-in self-test function
- Built-in noise suppression filter
- Software and algorithm support available (For tilt compensation, soft/hard-iron calibration)

Applications

Quadcopter/Drone Applications
Augmented Reality Applications
Virtual Reality Applications
Location Based Services
Navigation Applications
Industrial Applications
Magnetometry
IOT devices
Heading
Gaming

2 Block Diagram, Package Dimension and Application Circuit

2.1 Block Diagram

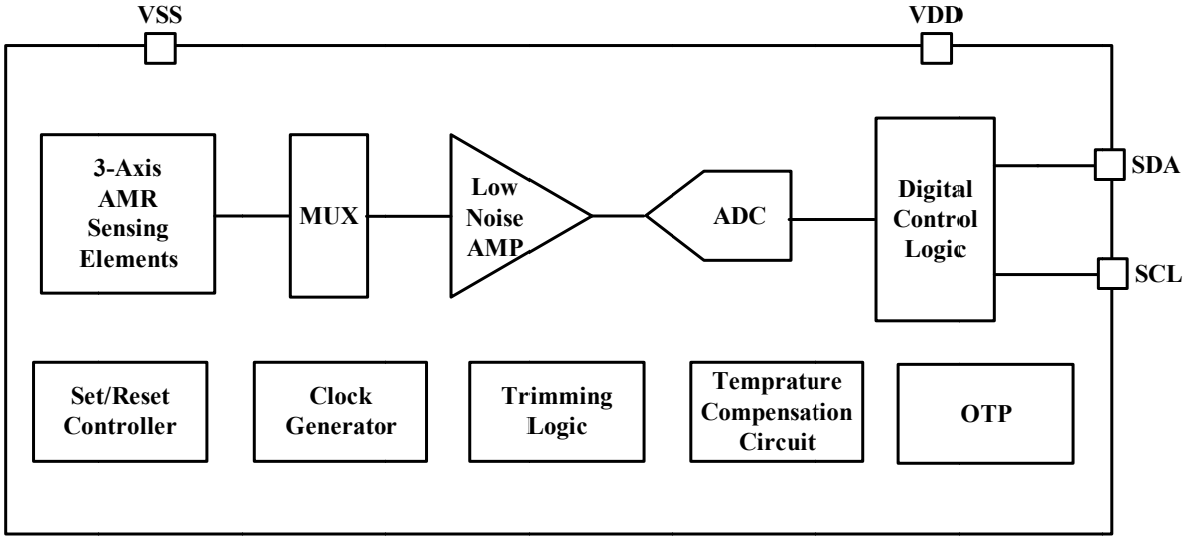

Figure 1. Block Diagram

2.2 Package Dimensions and Magnetic Field Directions

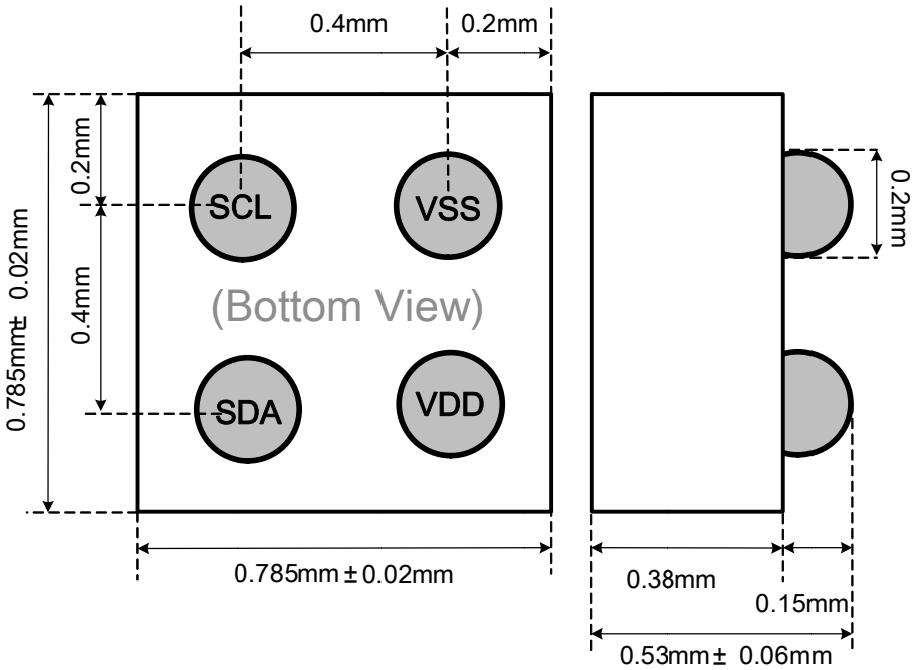

Figure 2. Package Dimensions

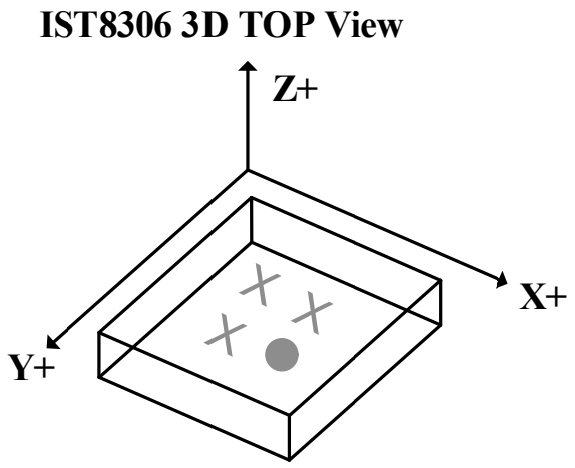

Figure 3.Magnetic Field Directions

2.3 Marking Information

Date code X_1X_2
Product code X_3●

X_1: Year
X_2: Week
X_3: Product code

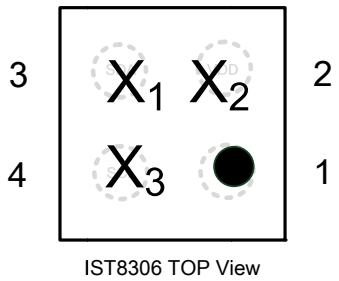

2.4 Pin Configurations and Functions

Pin No	Pin Name	I/O type	Function
1	VSS	Supply	Ground
2	VDD	Supply	Power supply voltage, 1.65~1.95V
3	SDA	I/O	I^2C data
4	SCL	I	I^2C clock

2.5 Application Circuit

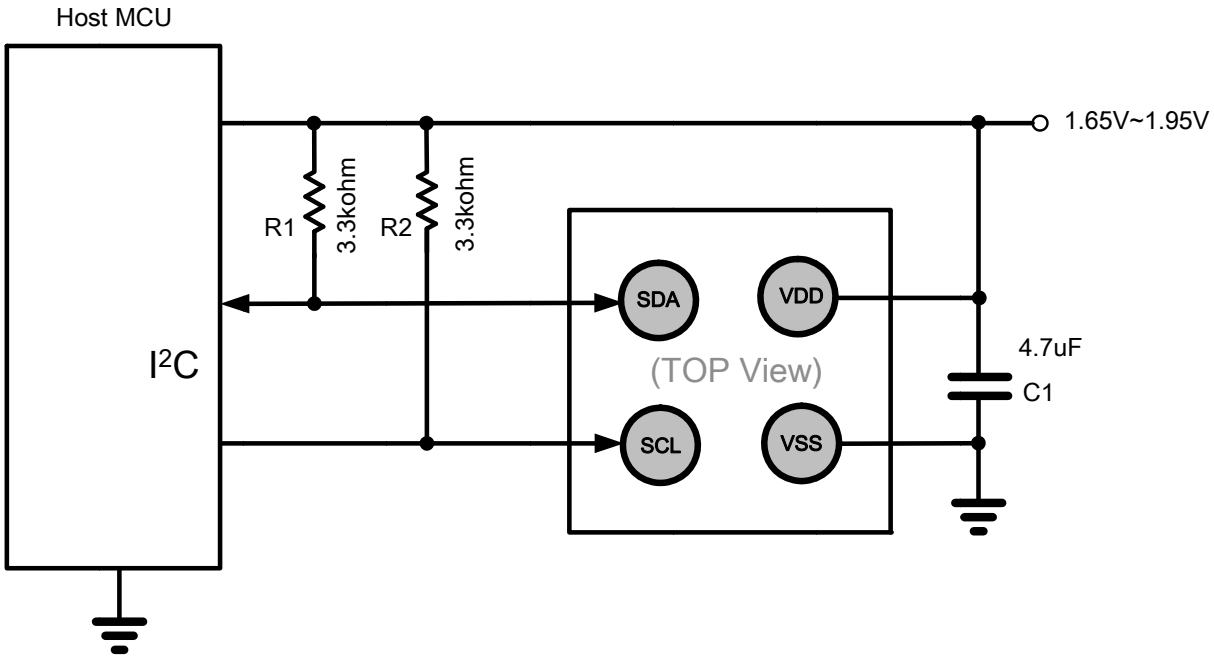

Figure 4. Application Circuit

3 Electrical Specifications

3.1 Absolute Maximum Ratings

Parameter	Symbol	Limits	Unit
Storage Temperature	TSTG	-40 to +150	°C
Supply Voltage	VDD	-0.3 to +1.98	V
Electrostatic Discharge Voltage*[1]	VESD_HBM	-4000 to 4000	V
Electrostatic Discharge Voltage*[2]	VESD_MM	-400 to 400	V
Electrostatic Discharge Voltage*[3]	VESD_CDM	-800 to 800	V
Reflow Classification	JESD22-A113 with 260 °C Peak Temperature		

1. Human Body Model (HBM)
2. Machine Model (MM)
3. Charge Device Model (CDM)

3.2 Recommended Operating Conditions

Parameter	Symbol	Min.	Typ.	Max.	Unit
Operating Temperature	TA	-20		+85	°C
Supply Voltage	VDD	1.65	1.8	1.95	V

3.3 Electrical Specifications

(Operating conditions: TA=+25℃; VDD=1.8V; 4.7μF ceramic capacitors tied to between VDD & VSS pin with maximum allowed line width and 5mm distance.)

Parameter	Symbol	Conditions	Min.	Typ.	Max	Unit
Operating Current	IDD3A	Full operation with OSR*[1]=8 setting, 10 sps 20 sps 50 sps 100 sps 200 sps		 50 110 250 570 1170		uA
Suspend Current	ISPD			1		uA
Output Data Rate (ODR)	ODR				200*[2]	Hz

Input Low Voltage	VIL		0		VDD *30%	V
Input High Voltage	VIH		VDD *70%		VDD	V
Output Low Voltage	VOL	IOL= +4 mA	0		VDD *20%	V
Output High Voltage	VOH	IOH= -100 uA (Except SCL and SDA)	VDD *80%		VDD	V

1. Register OSRCNTL(0x41) controls OSR setting.
2. 200Hz ODR can be achieved with OSR≦8.

3.4 Magnetic Sensor Specifications

(Operating conditions: TA=+25℃; VDD=1.8V; 4.7μF ceramic capacitors tied to between VDD & VSS pin with maximum allowed line width and 5mm distance.)

Parameter	Symbol	Condition	Min.	Typ.	Max	Unit
Dynamic Range (Each Axis)	DR	Total Applied Field		±3000		uT
Linearity	LIN	±200 uT Range		0.1		%FS
		±3000 uT Range		1.5		
Resolution	RESO			0.33		uT/LSB
Sensitivity	SEN			3		LSB/uT
Hysteresis	HS			0.1		%FS

4.5 Power On Reset (POR) Specifications

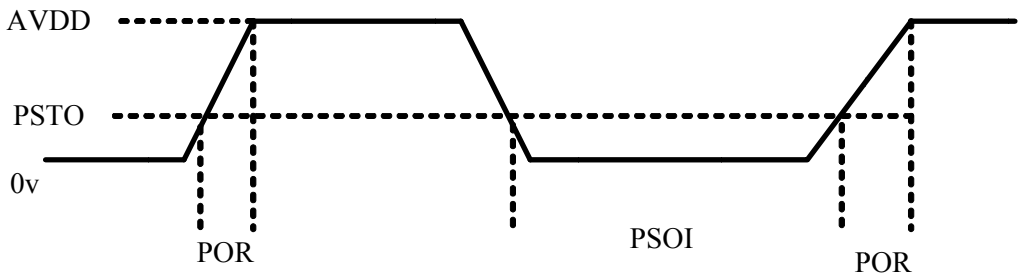

PSTO: Power Supply Turn Off voltage
PSOI: Power Supply Turn Off Interval
POR: Power On Reset

PSTO: max=0.7volt
PSOI: min=10ms
POR: max:50ms

When POR circuit detects the rise of VDD voltage, it resets all internal circuits and initializes all registers. After reset, IST8306 transits to Stand-By mode.

4 Technology Overview

4.1 AMR Technology

IST8306, an iSentek patented magnetometer is designed based on Anisotropy Magneto-Resistance (AMR) technology. The output is generated from the resistance change of the AMR resistors while external magnetic field changes. The sensitivity is about 50 to 200 times larger than traditional Hall element depending on designed dynamic range. The high sensitivity allows high response speed with lower noise and lower power consumption.

4.2 High Reliability Monolithic Design

IST8306 consists of full AMR Wheatstone Bridges detecting magnetic component in three directions, orthogonal to each other. Monolithic packaging of IST8306 enables outstanding stability to thermal shock and ultra-small footprint, making it a high efficient and robust device.

4.3 Ultra-low Hysteresis Design

The ultra-low hysteresis design of IST8306 prevents the magnetometer from dynamic offset after encountering a strong external magnetic field impact. Practically, the angular accuracy restores spontaneously after the removal of magnetic interferences. This feature of IST8306 minimizes the requirement of user calibration, providing a much better user experience as comparing to the conventional products like Hall sensor which need frequently calibration to ensure required precision.

4.4 Magnetic Setting Mechanism

AMR sensing resistors consist of high permeability thin film and metallization. AMR resistors are soft magnetic, irreversible magnetic rotation may occur after experiencing strong external magnetic field, resulting in angular error induced by the residual magnetization in the sensitive direction. To solve this issue, a magnetic setting mechanism is introduced in IST8306. A magnetic field is generated within IST8306 to align the magnetization of AMR sensing resistors before every measurement. This auto-zeroing mechanism ensures the stability of angular accuracy of IST8306 during whole operation.

5 Ordering Information

Order Number	Package Type	Packaging	Marking Information
IST8306	WLCSP – 4 pin	Tape and Reel: 5k pieces per reel	X_1X_2 X_3● X_1: Last number of the year X_2: Week number X_3: Product code

For more information on iSentek's Magnetic Sensors, please contact us by phone at +86-134-8247-9320 (China) or +886-2-2698-3306 ext:110 (Taiwan); via e-mail: sales@isentek.com or visit us online at www.isentek.com.

The application circuits herein constitute typical usage and interface of iSentek's product. iSentek does not warranty or assume liability of customer-designed circuits derived from this description or depiction.

iSentek reserves the right to make changes to improve reliability, function or design. iSentek does not assume any liability arising out of the application or use of any product or circuit described herein; neither does it convey any license under its patent rights nor the rights of others.

The sensing technology of IST8306 is protected by Taiwanese Patent I565958.