Detector Horizontal Type

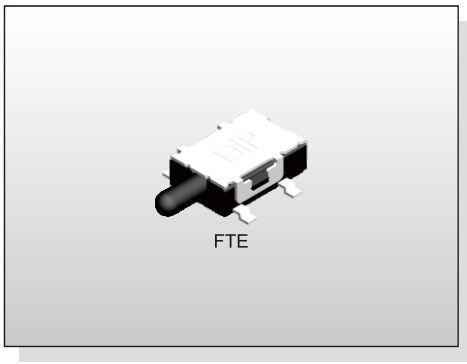

FEATURES

※Ultra-low profile with 2.0mm
※Sharp detection feeling

APPLICATION

※Detection of car audio mechanism
※Smoke detector
※Notebook

SPECIFICATION

Contact Rating	1mA, 5V DC
Contact Resistance	1Ω max.
Insulation Resistance	100MΩ min. 100V DC
Dielectric Strength	100V AC/1 minute
Operating Force	105gf max.
Travel	2.0mm
Operating Life	100,000 cycles
Operating Temp.	-10°C ~ +60°C
Storage Temp.	-40°C ~ +85°C

HOW TO ORDER

F T E - □ □ □ - □ - □

- Package: T/R=Tape & Reel
- V=RoHS & Lead Free Solderable, Q=Halogen Free
- □=Silver Plating, A=Gold Plating
- □=Without Post, C=With Post

CIRCUIT DIAGRAM		
1	2	3
Black	Brown	Red

CIRCUIT

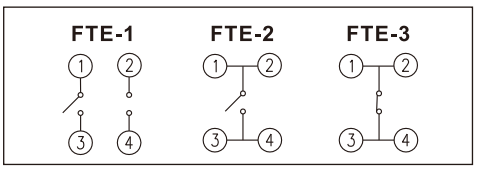

PACKAGE

<Tape & Reel>
3000 pcs

FTE-1C

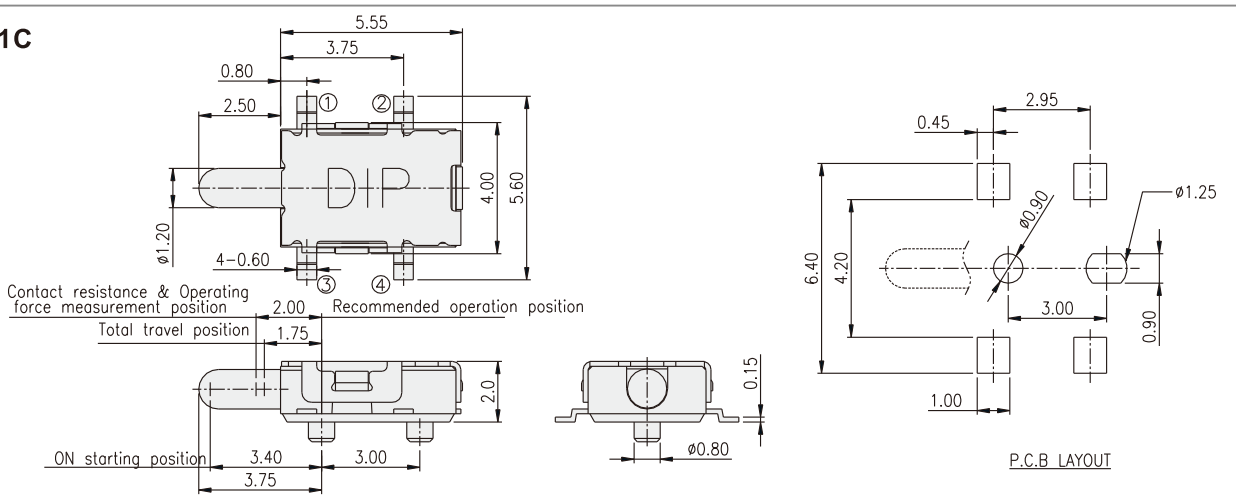

FTE-2

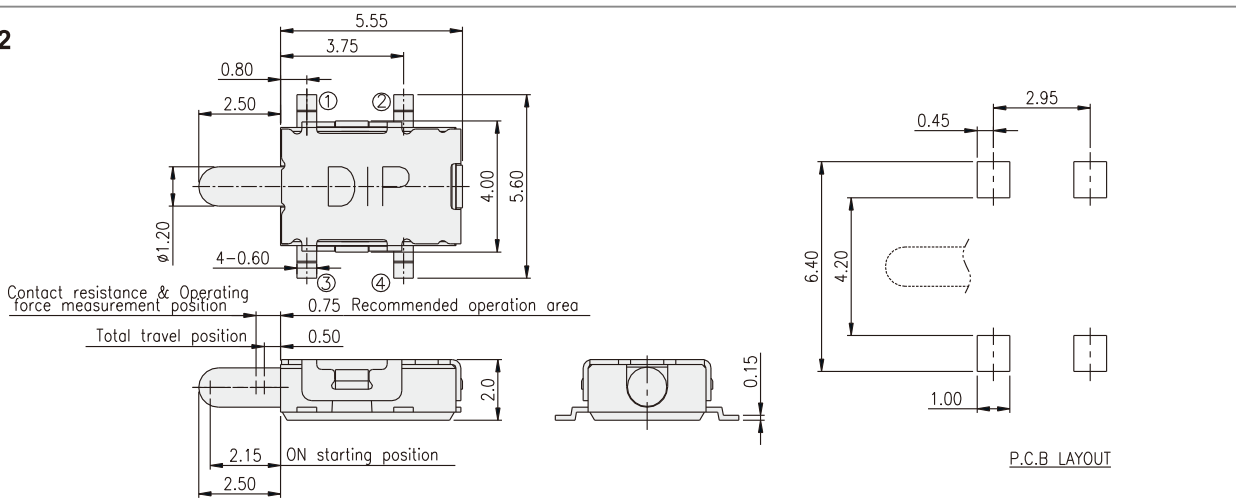

Detector
Horizontal Type

FTE-3C

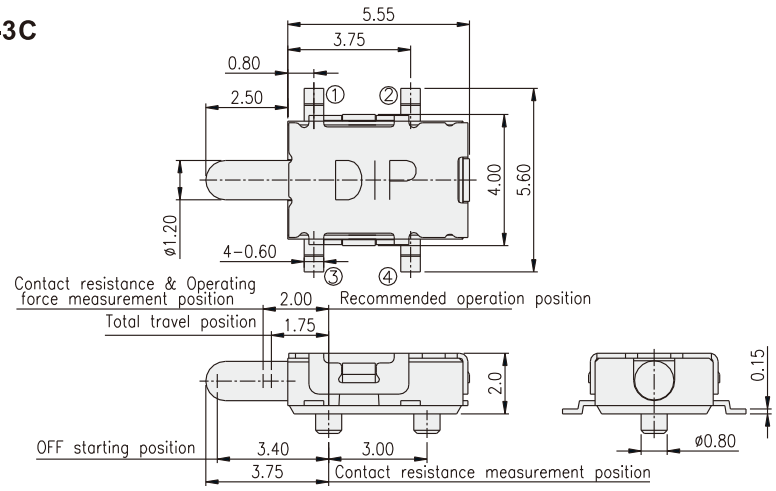

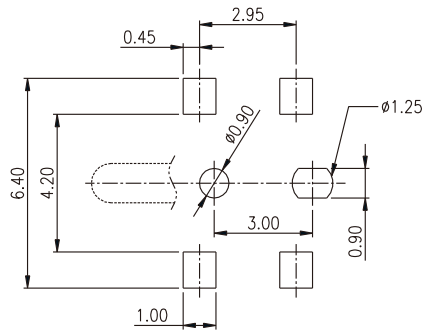

P.C.B LAYOUT